Sectional garage doors

NEW: Duragrain surface finish for modern door design

HÖRMANN

Benefit from numerous advantages

Sectional doors open vertically upwards and are suspended under the ceiling to save space. This construction principle means you can make full use of the space inside and in front of the garage. Sectional garage doors can be fitted in any garage opening and offer up to 14 cm more passage width than up-and-over doors. They are also optimally sealed with flexible and weather-resistant seals on all four sides.

Treat yourself to this comfort and convenience.

CONTENT

6 Good reasons to try Hörmann

18 Overview of steel sectional doors

22 Overview of steel surface finishes

23 Overview of aluminium frame doors ■ **NEW**

24 Overview of solid timber sectional doors and timber types

26 General overview

32 Door styles

46 Door design

54 Handles / release

55 Glazings

56 Wicket doors

58 Side doors

60 Modernise and improve

66 Garage door operators

70 Accessories

78 Technology

80 Premium and standard version

81 Garage sectional door LPU 67 Thermo

82 Industrial sectional door SPU F42 Plus

84 Hinged garage door DFT 42 ■ **NEW**

86 Performance characteristics

88 Dimensions and fitting data

Some of the doors shown are equipped with optional extras and do not always correspond to the standard versions.

The surface finishes and colours shown are subject to the limitations of the printing process and cannot be regarded as binding.

All rights reserved. No part may be reproduced without our prior permission. Subject to changes.

ADVICE

The sectional door – which one is right for me?

There are several aspects to consider when deciding on a new sectional garage door. The days of boring, functional metal doors are long gone. A huge choice of sectional doors that combine function, appearance and security is now available. We have compiled compact information on all important garage door details, to ensure you can concentrate on the essentials when purchasing a door.

Material – steel or timber?

The typical materials for garage doors are timber and steel. **Steel garage doors are heavy-duty and durable.** Rain runs off without leaving any streaky marks thanks to the use of hot-galvanized material and a high-quality polyester-primer coating on both sides, which also protects against rust. Steel sectional doors are insulated with a rating of good to very good, offer countless design possibilities and are very easy to clean.

Real timber garage doors are available in various designs and **go very well with houses featuring lots of timber elements.** Because wood is a natural resource, timber garage doors require lots of care and are comparatively expensive. Regular care of timber garage doors is therefore particularly important to protect the wood in the long-term.

The facade door is a particular highlight amongst garage doors, because it can be cladded in the material of the house facade and therefore almost invisibly integrated into the building design.

Thermal insulation – why is it important?

The subject of **insulation is particularly important when the garage is connected directly to the house** or is used as a workshop or hobby room.
Double-skinned sectional doors have very good thermal insulation properties. In addition, they feature particularly quiet door travel thanks to the sturdy door leaf. Additional plastic profiles with extra seals minimise the thermal bridge between the wall and frame. These profiles **can improve the insulation by a further 15 percent.**

Operators – what are their advantages?

Garage door operators are now practically always standard equipment on garage doors. Automatically operated garage doors offer the advantage **that the garage door can be operated particularly conveniently with the hand transmitter directly from the car**. Smart Home solutions mean it is now possible to open garage doors at any time and from anywhere using a smartphone. Operators also offer increased **protection against break-ins** because a lock means they cannot be lifted up when the door is closed. Attention should be paid to an anti-lift kit that also works in case of power failure.

Garage entrances – which doors are available?

A door integrated in the garage door is recommended if the garage is not directly accessible from the house. So-called wicket doors are practical because **the garage door does not need to be fully opened every time**, for example if you need a bike. The wicket door should have a low threshold rail to minimise the risk of tripping. For large garages, a garage side door without a threshold rail can also be used.

▲ A practical wicket door means you can retrieve bicycles from your garage without opening the door fully.

▼ Double-skinned sectional doors with high thermal insulation are recommended if your garage is also used as a hobby room.

“A good reputation must be earned.”

August Hörmann

In keeping with the tradition started by the company’s founder, the Hörmann brand today is a true promise of quality. The family-owned company has over 80 years of experience in door and operator construction and, with sales of over 20 million doors, is no. 1 in Europe. This makes a Hörmann sectional door a reassuring purchase.

1 Brand quality “Made in Germany”

All essential doors and operator components are developed and manufactured by Hörmann, are **perfectly matched to each other** and **tested and certified** by independent, recognised institutes to ensure your safety. They are manufactured in Germany according to the DIN ISO 9001 quality management system and meet the requirements of European standard 13241. Furthermore, our highly qualified employees work intensively on new products, continual further developments and improvements to details. The results are patents and unique products on the market.

Made in Germany

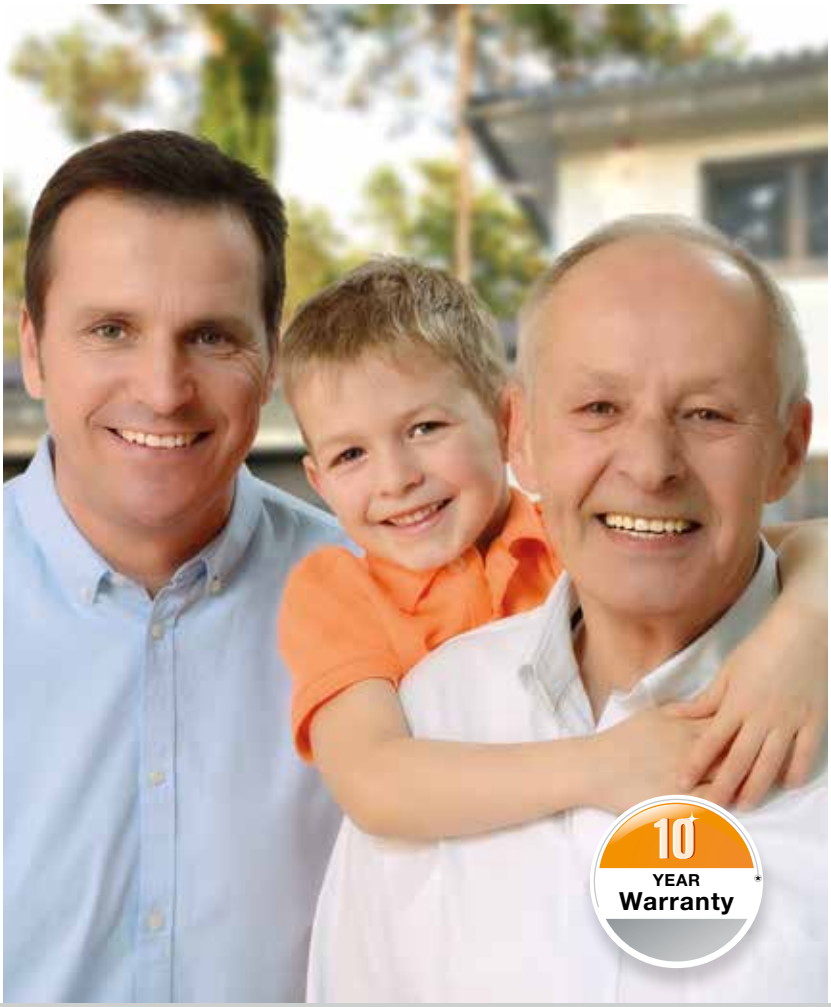

2 Garage doors for generations

Endurance tests under real-life conditions ensure mature series products with Hörmann quality. Thanks to this, as well as excellent technical solutions and uncompromising quality assurance, you receive a **10-year warranty on all Hörmann sectional doors and a 5-year warranty on Hörmann operators.***

* The complete warranty conditions can be found at: www.hormann.co.uk

3 An eye on the future

Hörmann is setting a good example. This is why the company obtains **100% of its energy consumption from green sources.** Together with an intelligent and certified energy management system, CO_2-neutral mailing and the recycling of valuable materials, **more than 40000 tons** of CO_2 **are saved each year.** And last but not least, Hörmann also offers products for sustainable construction.

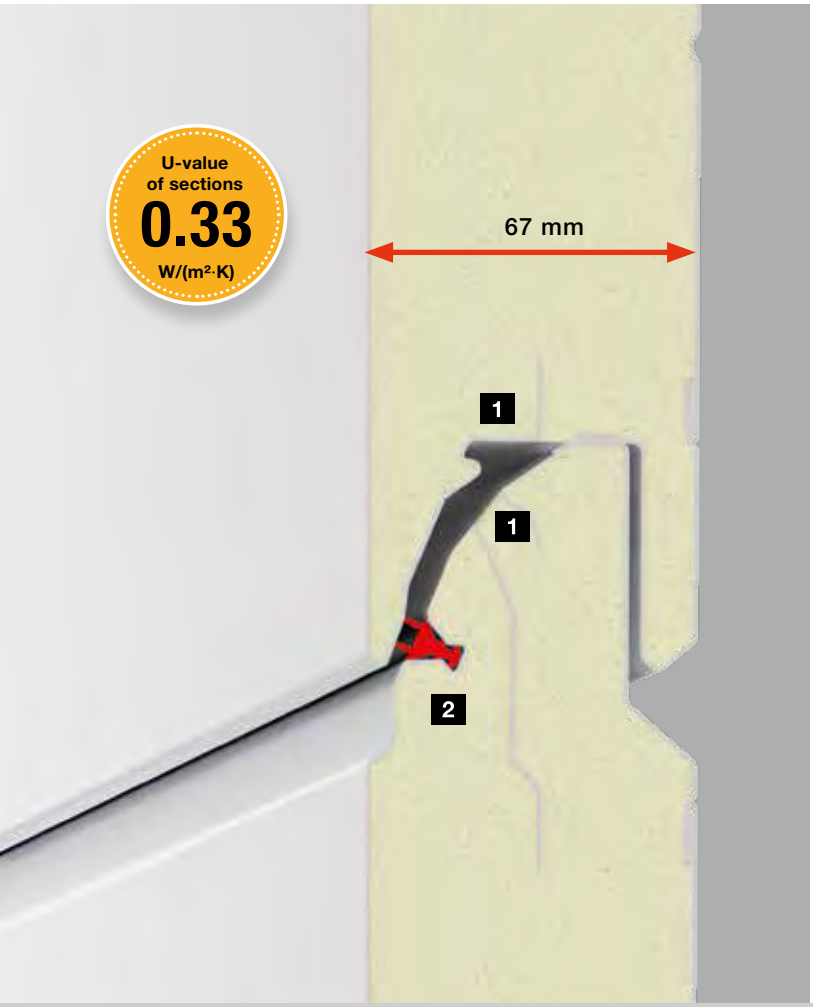

4 Modern energy-saving door

Double-skinned sectional doors are particularly recommended for garages attached directly to the house. In addition to the LPU 42 with very good thermal insulation, the **LPU 67 Thermo** offers everything that is expected from modern construction: **excellent thermal insulation achieved by sections with a thermal break** 1 with a U-value of 0.33 W/(m²·K)*, a very good seal on spaces between sections with double lip seals 2 and an optimum floor connection using double bottom seals, which also compensate for floor unevenness and energy losses.

For further information, see page 78.

* U-value of door (5000 × 2125 mm): 1.0 W/(m²·K)

5 Efficient thermal insulation

Only from Hörmann

With the **Hörmann ThermoFrame** you can improve the already high insulation values, especially of the double-skinned sectional doors. The black plastic profile is fitted together with the door frame. **Insulation is improved by 15%**** thanks to the thermal break between the frame and brickwork. The optional ThermoFrame frame connection is available for all Hörmann sectional doors.

For further information, see page 86.

** For a double-skinned sectional garage door LPU 42 size 5000 x 2125 mm

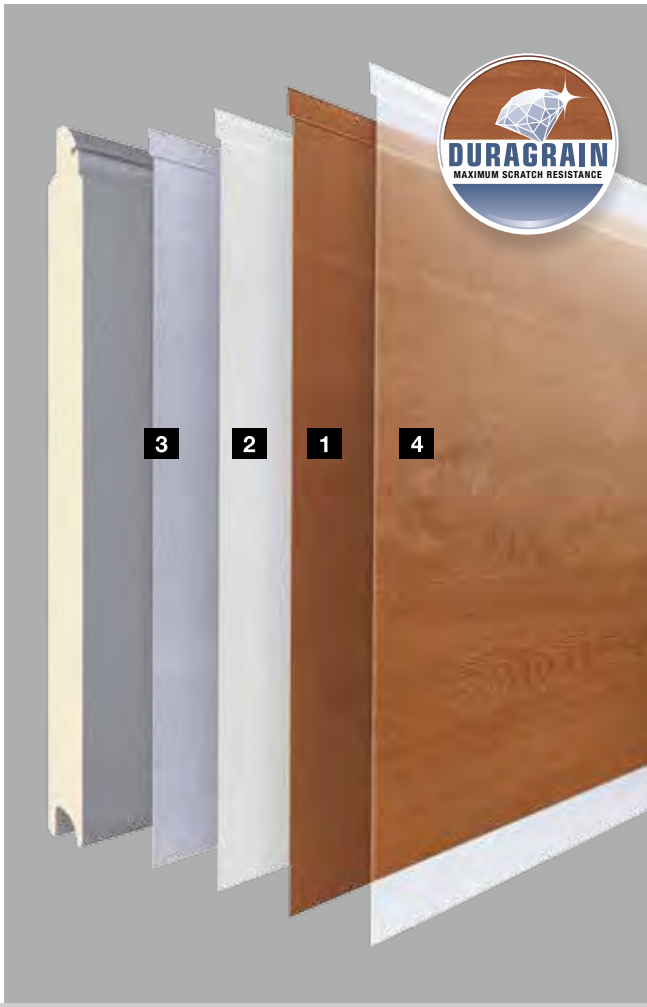

6 Optimum long-term protection

Only from Hörmann

A non-brittle, 4 cm **plastic frame shoe** covers the frame where it is prone to rusting and offers **long-term protection against corrosion**, even with waterlogging, which is unmatched by competitor solutions. Together with the door's bottom seal, the frame shoe makes for a bottom edge that is visually appealing.

7 Permanently beautiful Duragrain decors ■ NEW

Only from Hörmann with high-strength protective coating

The new Duragrain surface finish with 24 decors convinces with a **detailed, natural and colourfast door view. An innovative digital printing** 1 **on the primer** 2 **of the galvanized section** 3 **and a final high-strength protective coating** 4 ensure a permanently beautiful door view. The optional lintel and frame fascias are supplied in a colour matching the decor.

For further information, see pages 48 – 49.

8 A harmonious overall appearance

Only from Hörmann in all door sizes

1 Even spacing and invisible section transitions for ribbed doors
Hörmann garage doors are distinguished by even, exact spacing of sections **[A]**. The sections are shaped so that the transitions are practically invisible when the door is closed. See for yourself!

To add to the overall appearance, a practical side door with an alignment matching the sectional garage doors is also available. For further information, see pages 58 – 59.

2 Irregular spacing of sections [B], [C] due to different section heights coupled with visible section transitions on competitor doors. This gives the door an uneven look.

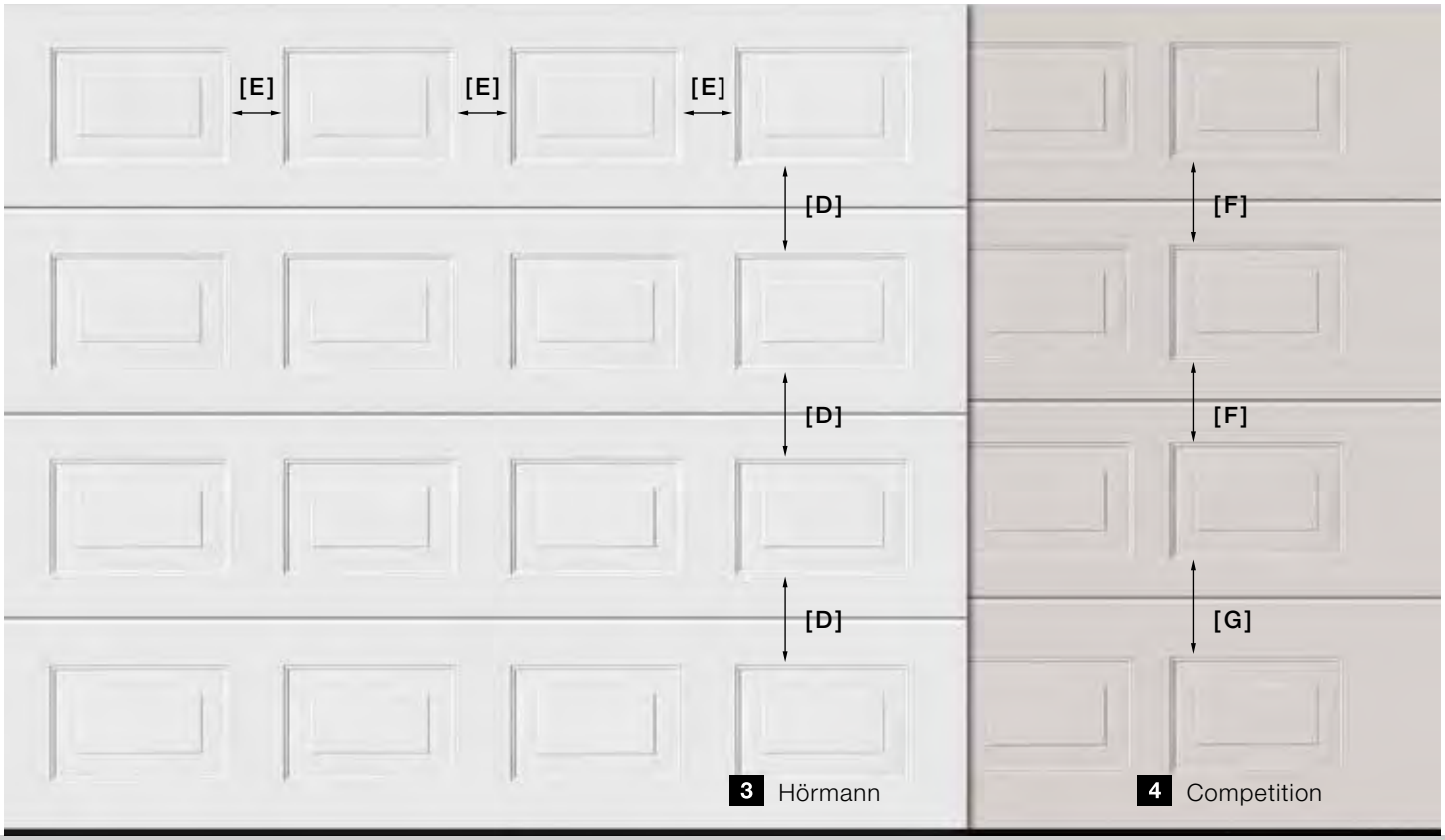

3 Hörmann

4 Competition

Only from Hörmann in all door sizes

3 Uniformly divided panelled doors
To create a harmonious overall appearance, the height of the spaces between the individual panels **[D]** of Hörmann sectional doors is exactly even. This is achieved by using sections with the same height across the entire door height. The horizontal spacing between the panels within a section **[E]** is also uniform. This gives the doors an even appearance.

On request, side doors are also available with the same section spacing as the sectional garage door. For further information, see pages 58 – 59.

4 Irregular panel spacing [F], [G] due to different section heights on competitor doors. This gives the door an uneven look.

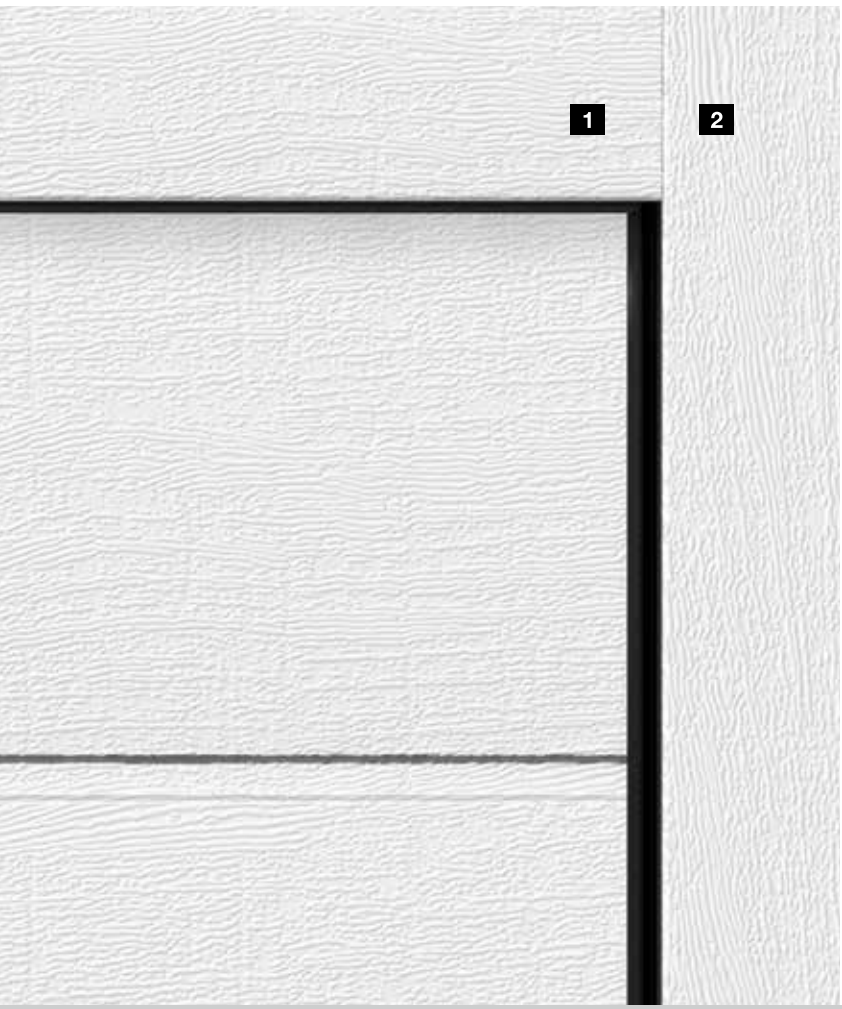

9 Matching appearance of frames and door leaves

Only from Hörmann

The **harmonious appearance of a door** is the result of many small details: For white doors and all surface finishes, the fascia panel 1 is always provided matching the door sections. This ensures that everything fits together. The side frames 2 are available with a white Woodgrain surface finish* as standard. For sectional doors with the surface finishes Sandgrain, Silkgrain or Decograin as well as coloured doors, the frame coverings are optionally available in the surface finish of the door section. For Duragrain doors, we optionally supply the frame cladding and the panels in a colour that matches the decor.

For further information, see page 62.

* For LPU 67 Thermo and LPU 42 in the premium versions in Grey white RAL 9002

10 Flush-fitting fascia panels

For LPU 42 doors, a flush-fitting fascia panel is the **most elegant solution for an invisible transition** between the panel and door leaf. When the door is closed, the top door section 1 is flush with the panel 2.

For further information, see page 64.

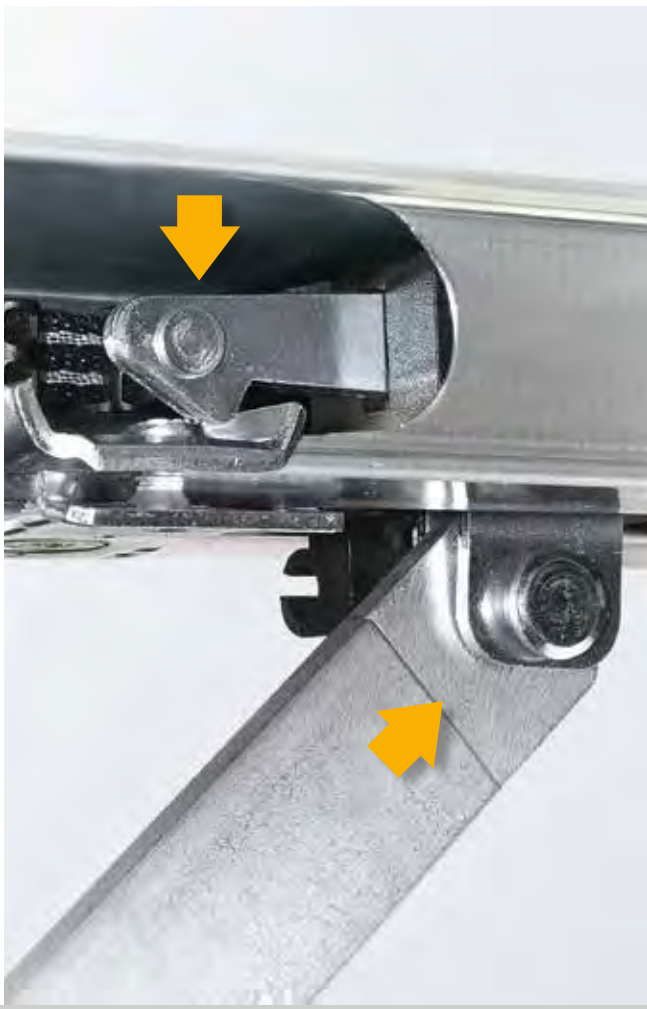

11 Practical solutions

Only from Hörmann

An LPU 42 door with wicket door is recommended for easy passage **with a trip-free threshold** into your garage. You can also retrieve bicycles or gardening equipment from your garage without opening the door.
The stainless steel threshold is only 10 mm in the centre and 5 mm high at the sides. This makes it easier to wheel things through and reduces the risk of tripping.

For further information, see pages 56 – 57.

12 Added safety is a given

Only from Hörmann

Mechanical anti-lift kit in the operator boom

Uninvited guests barely stand a chance with Hörmann's automatic sectional doors. When the garage door is closed, the **anti-lift kit** automatically engages in the operator boom's stop, then **locks immediately and is secured against forced opening**. This patented door locking functions purely mechanically and, in contrast to competitor operators, continues to secure the door even when the power fails.

Take a look at the video "Garage door operators – reassuringly safe" at: www.hormann.co.uk/videos

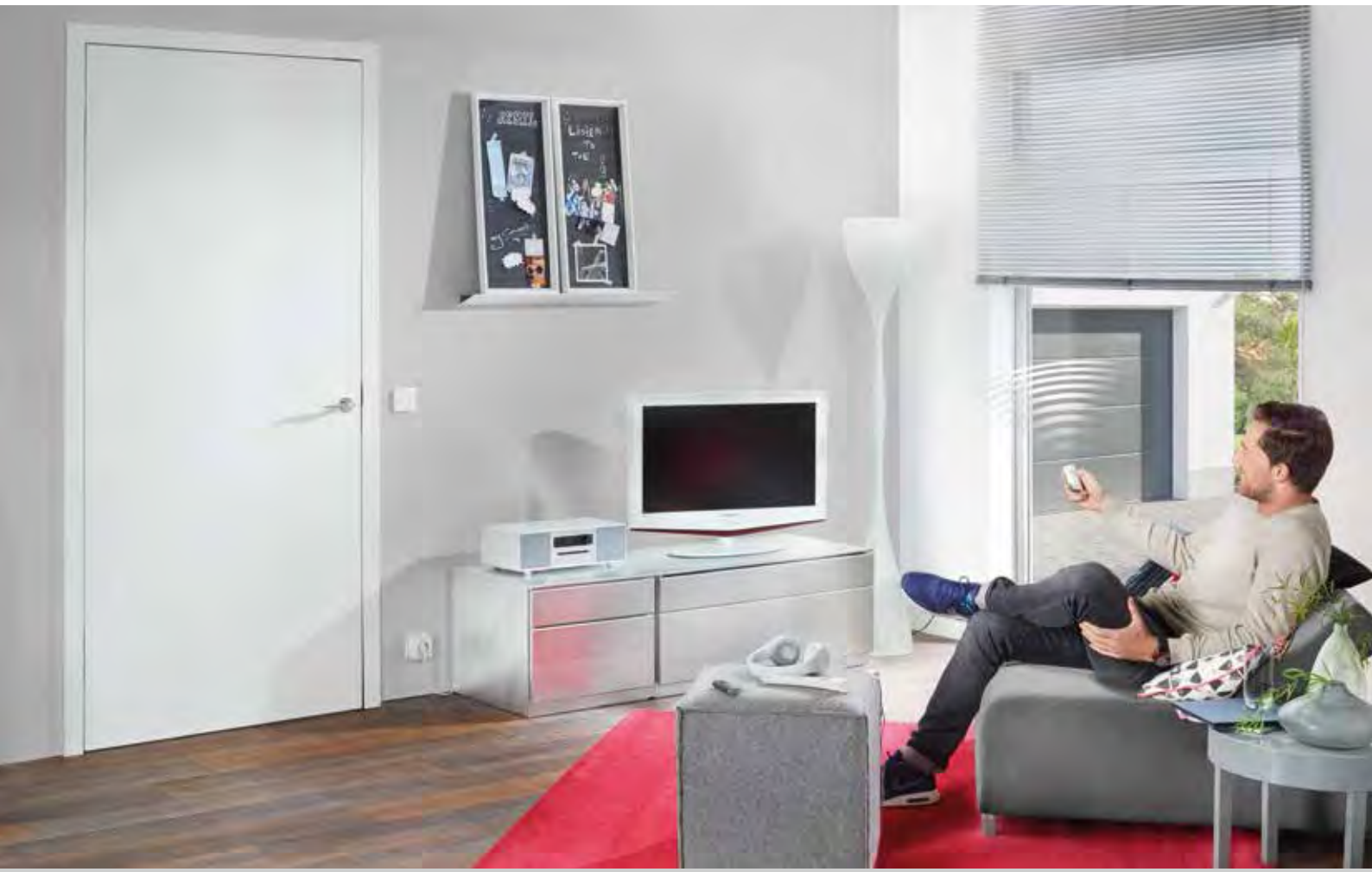

13 BiSecur radio system with certified security

Only from Hörmann

The bi-directional BiSecur radio system is based on **future-oriented technology** for the convenient and secure operation of garage and entrance gate operators, door operators, lights and more. This extremely secure BiSecur encryption protocol, developed by Hörmann, with a stable, interference-free range makes sure that no-one can copy your radio signal. It was tested and certified by security experts at Bochum university.

Take a look at the video “BiSecur – the radio system with certified safety” at: www.hormann.co.uk/videos

Perfectly aligned and 100% compatible

All BiSecur operators, receivers and control elements are 100% compatible. Using a hand transmitter or radio code switch, for example, you can conveniently operate your garage door as well as an entrance gate equipped with a Hörmann operator, your door operators or other devices with BiSecur receivers.
With the **new Hörmann BlueSecur app**, **you can conveniently operate your garage or entrance gate via Bluetooth* with your smartphone**. In addition, other user permissions** can be permanently or temporarily transferred to other smartphones, so that every family member always has their “door opener” with them.

For further information, see pages 66 – 77.

* In conjunction with an external Hörmann Bluetooth receiver
** In-app purchases may be necessary

14 Convenient querying of the door position

You no longer have to go out in any wind and weather to check if your door is closed. At the press of a button, the colour of the LED on the hand transmitter HS 5 BS or the internal push button FIT 5 BS indicates the position of the door. If required, another push of a button*** closes the door. It is the most convenient and secure way to control your door.

*** An additional photocell is required for operation without visual contact to the door.

15 Award-winning design

In addition to a black or white design, **BiSecur hand transmitters** are characterised by an elegant shape that fits easily in the palm of your hand.

Hörmann's BiSecur hand transmitters with an optional high-gloss surface in a piano lacquer look have received the reddot design award for their exclusive design.

Take a look at the video "Safe, convenient, exclusive – the Hörmann BiSecure radio system" at: www.hormann.co.uk/videos

Figure above: hand transmitter HS 5 BS with hand transmitter station (optional)

ADVICE

5 reasons why garage door fitting should be left to the professionals

Bent doors, squeaky hinges, slow door opening – a lack of advice and mistakes when fitting the garage door yourself quickly spoil the pleasure of having a new door and could even cause serious injuries. If you want your door to be fully functional within a short period of time and you don't feel that you're a talented handyman, you should have professionals do the fitting. Trained specialist personnel knows about the different kinds of garage doors, offers good advice and professionally fits all components of the door.

▲ Your Hörmann partner will ensure proper disposal of your old garage door.

Dismantling the old garage door for renovation

The old door generally has to be removed before the new garage door can be fitted. **However, care must be taken when dismantling the door leaves.** These can cause serious injuries because the door tension springs on up-and-over doors are under high tension or the door leaves could fall over. Anyone changing from an up-and-over door to a sectional door, for example, also needs to remove the wall and ceiling fixing so that the new components of the garage door can be fitted.

Measuring the door opening

Accuracy when measuring is important so that the door fits the garage opening. Gradients need to be considered in some cases or the ceiling height of the garage is not sufficient to simply fit a new door. Older garages often have special dimensions that need to be observed and require special solutions. Incorrect measurement of the frame position can also be another problem when taking measurements. If the frame is fitted incorrectly, the garage door is difficult to open, makes noises when it is opened and closed or doesn't open in the first place. **Specialist partners take the measurements so that you don't need to worry about the right dimensions.** This means you can be sure of receiving the door to suit your needs, which fits perfectly in the garage opening when it is installed.

Finding the right materials for wall fitting

The right **screws, plugs and equipment, such as drills, to suit the wall type** need to be selected before the garage door can be fitted. This depends on whether the wall is made of concrete or is steel-reinforced, for example. Because garage doors produce a high pull and push force when they are opened or closed, it is particularly important that the guide rails are fixed to the wall with the right materials.

Fitting accessories, such as automatic operators

Automatic operators are an essential part of modern garage doors. **Operators should be considered directly during planning** so that they have space on the garage ceiling and form a unit with the door. Specialist partners can best judge which operators are suitable for which door. If you want to be sure that all parts are in the right place and that important safety functions including the automatic safety cut-out work properly, you should contact the professionals, such as the Hörmann sales partners.

Disposing of old garage door parts correctly

After fitting of the new garage door, **proper and environmentally-friendly disposal** of the old door is important. Please note that especially old timber doors are not allowed to be simply used as fire wood, because they have usually been painted several times over the years. Old steel garage doors also have to be disposed of properly. Independent disposal with local waste disposal companies is usually complicated and expensive. **Hörmann sales partners also take care of this step for you** and take the old door away after removal.

◀ Removal of the old door and fitting of the new garage door usually take place within one day.

Take a look at the video "Garage door modernisation" at: www.hormann.co.uk/videos

LPU 67 Thermo

The energy-saving door impresses thanks to 67-mm-thick sections with thermal break, achieving excellent thermal insulation.

LPU 42

The double-skinned LPU 42 door offers very good insulation with its 42-mm-thick sections.

LTE 42

The single-skinned LTE 42 door is the inexpensive solution for detached garages that do not require additional thermal insulation.

S-ribbed (LPU 42, LTE 42), Traffic white RAL 9016

M-ribbed (LPU 67 Thermo, LPU 42, LTE 42), Traffic white RAL 9016

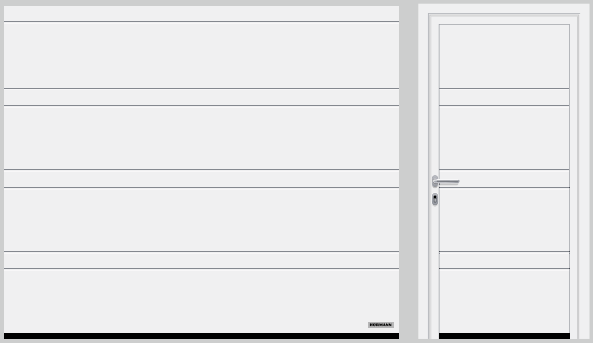

D-ribbed (LPU 42), Traffic white RAL 9016

T-ribbed (LPU 42), Traffic white RAL 9016

L-ribbed (LPU 67 Thermo, LPU 42), Traffic white RAL 9016

Panelled (LPU 42, LTE 42), Traffic white RAL 9016

Note
All LPU 42 door styles are also available with wicket door. For further information, see pages 56 – 57.

L-ribbed (LPU 67 Thermo, LPU 42),
design element style 450, Traffic white RAL 9016

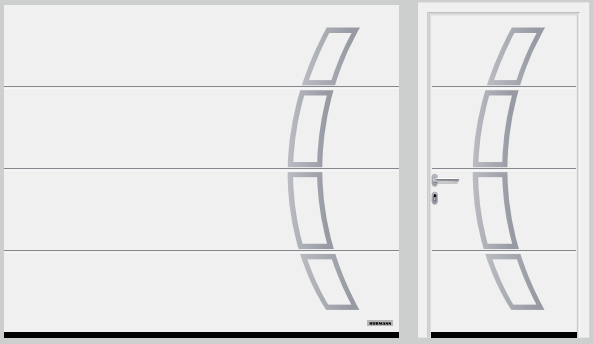

L-ribbed (LPU 67 Thermo, LPU 42),
design element style 457, Traffic white RAL 9016

T-ribbed (LPU 42), inlay element style 501 in stainless steel look,
design element style 454, Traffic white RAL 9016

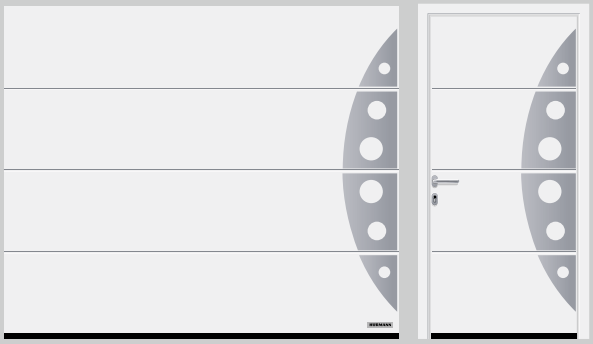

L-ribbed (LPU 67 Thermo, LPU 42),
design element style 458, Traffic white RAL 9016

Style 451

Style 461

Style 452

Style 462

Style 471

Style 481

Style 459

Style 469

Style 453*

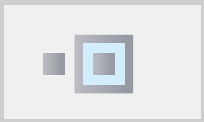

Style 463*

Style 455*

Style 460*

Style 472*

Style 482*

Style 473*

Style 483*

Style 474*

Style 475*

Style 456

Individual design styles

You can individually position and combine the design elements on your door, as shown in the door views. You can design your own door style. Doors with a wicket door are also available with design elements. Your Hörmann partner would be pleased to advise you.

Design element with optional real glass* for design styles 461 and 481 ■ **NEW**

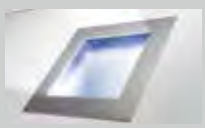

Design element with stainless steel and synthetic glazing

 * only LPU 42

M-ribbed (LPU 42), inlay element style 504 in timber look, in the wicket door, Traffic white RAL 9016

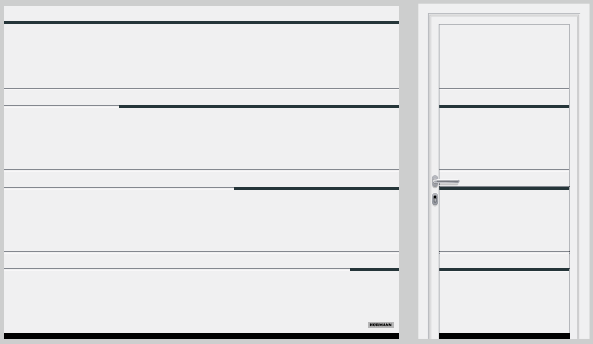

D-ribbed (LPU 42), inlay element style 502 in Anthracite grey RAL 7016, Traffic white RAL 9016

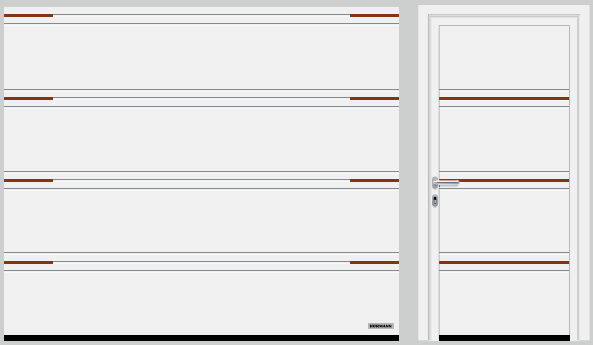

T-ribbed (LPU 42), inlay element style 500 with divided inlays in timber look, Traffic white RAL 9016

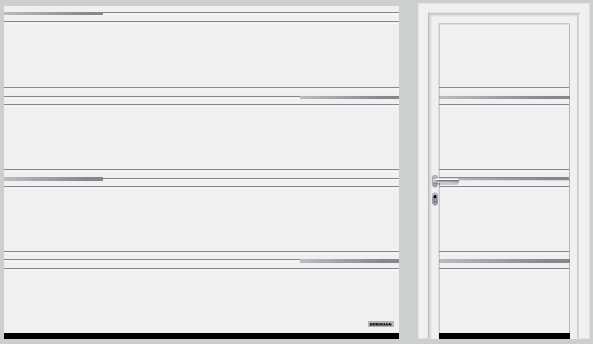

T-ribbed (LPU 42) inlay element style 503 in stainless steel look, Traffic white RAL 9016

Stainless steel design elements “numbers and words” ■ NEW

Design your garage sectional door LPU 42 with street name, house number or text. You have the choice between positive 1 and negative 2 characters as well as the Modern 1 and Classic 2 fonts (only for ribbed styles).

Special accent with inlays

M-ribbed, D-ribbed and T-ribbed doors are available in various inlay versions: e.g. continuous inlays run along the whole door width on style 501, while divided inlays, each 435 mm wide, are positioned on the left and right edges of door style 500.

T-ribbed with inlays in stainless steel look

T-ribbed with inlays in timber look

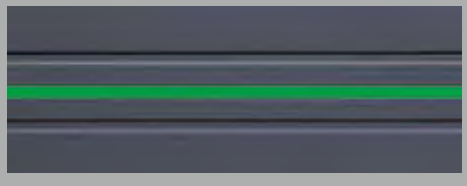

T-ribbed with inlays in RAL to choose
(Fig. shows inlay in RAL 6018)

1 Woodgrain

On this inexpensive, robust surface with an authentic sawn timber look, minor scratches can be easily repaired. This surface finish is available in Traffic white RAL 9016, in 15 preferred colours or in RAL to choose.

2 Sandgrain

The finely textured surface is an ideal choice for price-conscious owners and is particularly suited for modern homes. Available in Traffic white RAL 9016 and in 3 preferred colours.

3 Silkgrain

Thanks to its elegant door appearance, the silky smooth Silkgrain surface finish is the first choice for modern architecture. A 50% thicker exterior sheet on the sections also ensures higher stability and even smoother running. This surface finish is available in Traffic white RAL 9016, in 15 preferred colours or in RAL to choose.

4 Decograin

Decograin surface finishes with UV-resistant plastic film coating give your sectional door a striking and authentic timber look or an elegant metallic appearance in Anthracite. You can select from 5 natural timber decors or an elegant metallic decor.

5 Duragrain ■ NEW

For the Duragrain surface finish with its detailed, natural and colourfast door surface, you can choose from 24 decors.
The innovative digital printing process in combination with the final high-strength protective coating guarantees a permanently beautiful door view.

Steel surface finishes

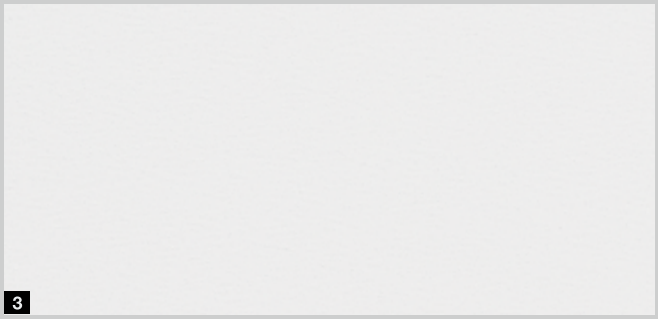

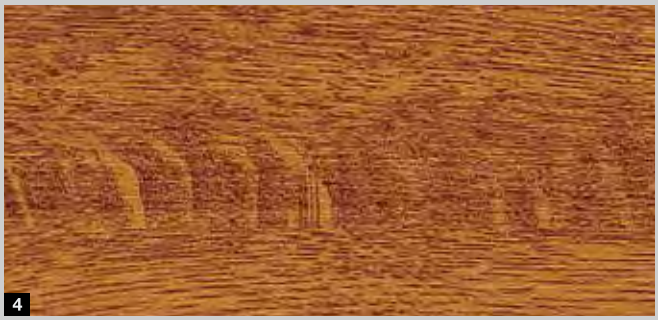

ART 42 / ART 42 Thermo

■ **NEW**

The Hörmann aluminum frame door with standard profile 1 or profile with thermal break 2 impresses with more light in the garage or better ventilation in the parking boxes of collective garages.

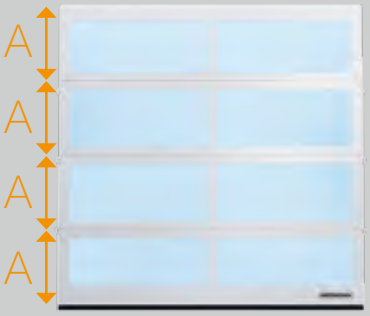

Door version with evenly spaced sections

Door version with evenly spaced window sections

Overall harmonious appearance

The harmonious overall appearance is created by the even distribution of the glazing frames A or the window sections B. The aluminium frame door is available in 15 preferred colours or RAL to choose. The 42-mm-thick aluminium frame is coated in Traffic white RAL 9016 as standard.

Profile versions

ART 42 ART 42 Thermo

Infill variations

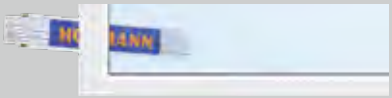

Polycarbonate double pane, clear
Synthetic double pane, clear

Synthetic double pane, white tinted (opal)

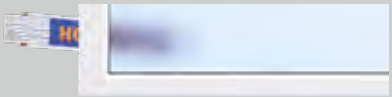

Synthetic double pane, crystal texture

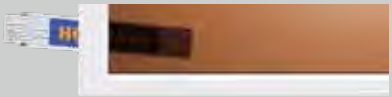

Synthetic double pane, brown tinted

Double-moulded pane

Synthetic double pane, grey tinted

Perforated stainless steel sheet

Stainless steel expanded mesh

Crimped mesh

Welded grille

LTH 42

Solid timber doors with a smooth or the new brushed surface finish are excellently suited for timber houses or buildings with many timber elements, such as timber framing or facade elements. Choose from 9 door styles or design your own timber door: With the help of a computer milling machine, we will manufacture your individual door.

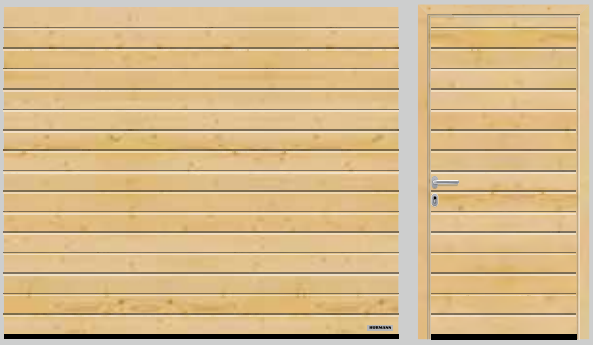

S-ribbed, Nordic Pine

M-ribbed, Nordic Pine

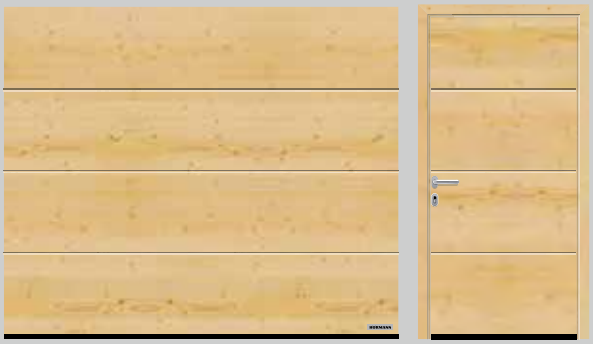

L-ribbed, Nordic Pine

Panelled, Nordic Pine

Style 401, Nordic Pine

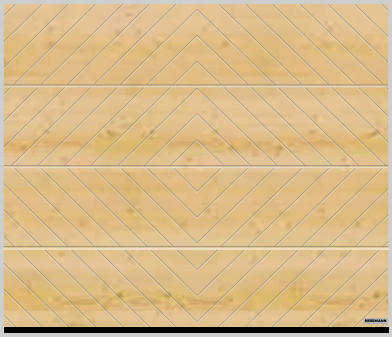

Style 402, Nordic Pine

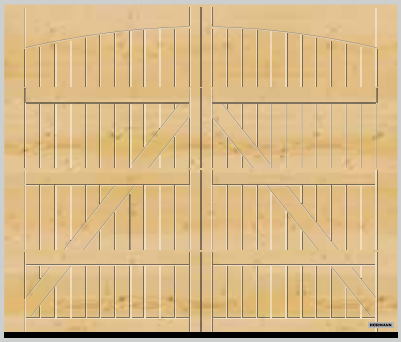

Style 405, Nordic Pine

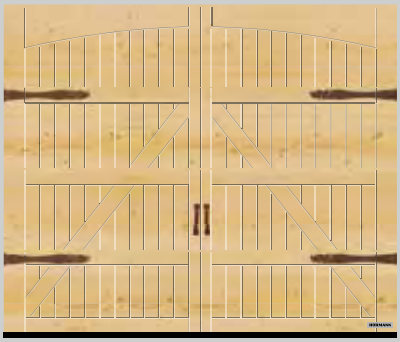

Style 405, with optional hinged door fittings “Exclusive”, Nordic Pine

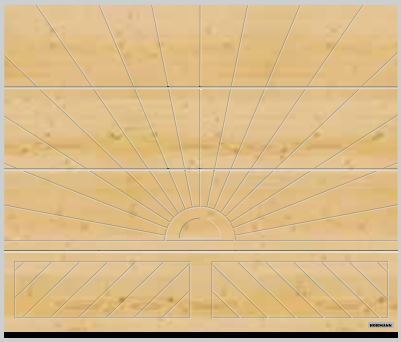

Style 403, Nordic Pine

Style 404, Nordic Pine

Setting accents

In styles 403 and 404, natural stone is used as an attractive design feature. Choose from the 3 natural stones Tropical green, Multicolour red and Balmoral rosso (variations in colour and texture are a natural characteristic).

Tropical green

Multicolour red

Balmoral rosso

Types of timber

1 Nordic Pine

Nordic Pine is a light-coloured softwood with predominantly straight graining. Heart shakes, individual resin pockets, spiral graining and the yellowish brown “knots” are natural characteristics of the wood.

2 Hemlock

Hemlock is a greyish white to light-greyish brown softwood with predominantly straight grain, brown mineral stripes along the grain with bark pockets.

A B Brushed surface finish

The brushed timber texture makes the natural grain of the wood visible and palpable.

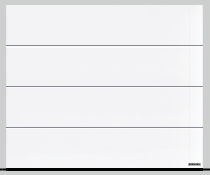

	S-ribbed	M-ribbed	L-ribbed
LPU 67 Thermo **Double-skinned steel sectional doors**			
Silkgrain		Traffic white RAL 9016 15 preferred colours RAL to choose	Traffic white RAL 9016 15 preferred colours RAL to choose
Decograin		3 decors: Golden Oak, Dark Oak, Titan Metallic CH 703	3 decors: Golden Oak, Dark Oak, Titan Metallic CH 703
Max. width Max. height		5000 mm 3000 mm	5000 mm 3000 mm
LPU 42 **Double-skinned steel sectional doors**			
Woodgrain	Traffic white RAL 9016 15 preferred colours RAL to choose	Traffic white RAL 9016 15 preferred colours RAL to choose	Traffic white RAL 9016 15 preferred colours RAL to choose
Sandgrain		Traffic white RAL 9016 3 preferred colours	Traffic white RAL 9016 3 preferred colours
Silkgrain		Traffic white RAL 9016 15 preferred colours RAL to choose	Traffic white RAL 9016 15 preferred colours RAL to choose
Decograin		6 decors: Golden Oak, Dark Oak, Night Oak, Rosewood, Winchester Oak, Titan Metallic CH 703	6 decors: Golden Oak, Dark Oak, Night Oak, Rosewood, Winchester Oak, Titan Metallic CH 703
Duragrain ■ **NEW**			24 decors
Max. width Max. height	6000 mm 3000 mm	6000 (7000*) mm 3000 (5000*) mm	6000 (7000*) mm 3000 (5000*) mm
LTE 42 **Single-skinned steel sectional doors**			
Woodgrain	Traffic white RAL 9016	Traffic white RAL 9016	
Max. width Max. height	5000 mm 3000 mm	3000 mm 3000 mm	

* As sectional door SPU F42 Plus (for further information, see pages 82 / 83)

Please note:
Detailed size ranges can be found on page 88.

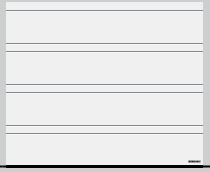

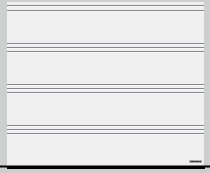

D-ribbed	T-ribbed	Panelled
		Traffic white RAL 9016 15 preferred colours RAL to choose
Traffic white RAL 9016 15 preferred colours RAL to choose	Traffic white RAL 9016 15 preferred colours RAL to choose	
		5 decors: Golden Oak, Dark Oak, Night Oak, Rosewood, Winchester Oak
6000 mm 3000 mm	6000 mm 3000 mm	5500 mm 3000 mm
		Traffic white RAL 9016
		3000 mm 3000 mm

	ART 42 ■ **NEW**	ART 42 Thermo ■ **NEW**
Aluminium frame door		
Frame	Traffic white RAL 9016 15 preferred colours RAL to choose	Traffic white RAL 9016 15 preferred colours RAL to choose
Infills	11 variants	11 variants
Max. width Max. height	5500 mm 3000 mm	5500 mm 3000 mm

Please note:
Detailed size ranges can be found on page 88.

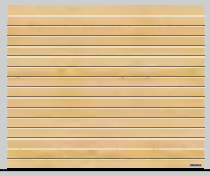

	S-ribbed	M-ribbed

LTH
Solid timber sectional doors

Nordic Pine	8 types of wood preservative Brushed surface ■ **NEW**	8 types of wood preservative Brushed surface ■ **NEW**
Hemlock	8 types of wood preservative Brushed surface ■ **NEW**	8 types of wood preservative Brushed surface ■ **NEW**
Max. width Max. height	5000 mm 3000 mm	5000 mm 3000 mm

	L-ribbed	Panelled

LTH
Solid timber sectional doors

Nordic Pine	8 types of wood preservative Brushed surface ■ **NEW**	8 types of wood preservative
Hemlock	8 types of wood preservative Brushed surface ■ **NEW**	8 types of wood preservative
Max. width Max. height	5000 mm 3000 mm	5000 mm 3000 mm

Please note:
Detailed size ranges can be found on page 88.

ADVICE

How to keep your home safe

Ensuring a safe environment for children

When garage doors become old, most people initially think of the outdated appearance. Many are not aware that the worn parts or an incorrect fitting can result in dangers that can lead to serious accidents. Building owners and redevelopers should therefore always pay attention to a **stop and reverse mechanism** on automatically operated garage doors. This ensures that the door stops as soon as it hits an obstacle. **This primarily protects playing children as well as pets;** the stop function prevents them from getting caught by the door.

Fire-rated doors ensure safety in the event of fire

Fire-rated doors can save lives in the event of a fire because they ensure that the fire does not cross over to adjacent rooms and, in the worst case, block escape routes. **Fire-rated doors are even stipulated by law** in areas at particular risk**, such as the transition point from the garage into the living area.** The apartment entrance doors developed for this use are not only fire-retarding, but also come with acoustic rating and with break-in-resistant RC 2 equipment as standard. This door can be optionally supplied as a smoke-tight version.

Our own four walls are the place where we feel at home, allowing us to relax and giving us a sense of security. For most people, safety means thinking about burglar-proof aspects. However, a safe home not only involves the best protection against intruders, but also the safest possible environment for playing children and safety in the event of a fire. In this advice section, we will inform you about the most important aspects of a secure home, which you should consider when building or modernising your home.

Protecting against break-ins and deterring intruders

If you are looking for the best protection against break-ins, you should select a high resistance class when choosing doors; whether it's an entrance door, side entrance or cellar door. The higher the specified class, the more time and effort an intruder needs to gain access to the house.
Because **cellar and side doors are still the most popular entry points into your house or garage for burglars,** this is exactly where you should use break-in-resistant RC 2 side doors. **For entrances, we recommend high-quality aluminium entrance doors with RC 3 security equipment as standard.**
Garage doors can also pose a security risk if they can be easily forced open. Unlike doors from other manufacturers, Hörmann automatic garage doors have a special anti-lift kit, which even prevents the door from being forced open in case of a power failure.

▲ S-ribbed in Woodgrain Fir green RAL 6009 with optional stainless steel house number ■ **NEW**

▶ S-ribbed in Woodgrain Anthracite grey RAL 7016; Hörmann aluminium entrance door ThermoSafe, style 650 Anthracite grey RAL 7016

▼ S-ribbed in Woodgrain Traffic white RAL 9016 with matching side door

▶ M-ribbed in Silkgrain Traffic white RAL 9016 with optional LED light strip on lintel, optional light key switch posts SLS and optional stainless steel house number
■ **NEW**

▲ M-ribbed in Decograin Titan Metallic CH 703 as industrial sectional door SPU F42 Plus for garages up to 7000 mm wide
(for further information, see pages 82 / 83)

▲ M-ribbed with solid timber panels in Hemlock

◀ Hinged garage door DFT 42 M-ribbed in Woodgrain Traffic white RAL 9016

DFT 42 ■ **NEW**

The double-leaf hinged garage door offers a simple partial opening e.g. to get bicycles from the garage. Choose your desired infill from the S-, M-, L-, D- or T-ribbed door styles in all surface finishes, colours and decors, matching the style of your home.

▲ L-ribbed in Decograin Titan Metallic CH 703

▶ L-ribbed in Duragrain Concrete ■ **NEW**

▼ L-ribbed in Silkgrain Ochre brown RAL 8001

▲ L-ribbed design style 450 in Silkgrain Light grey RAL 7035 with optional stainless steel house number ■ **NEW**; Hörmann aluminium entrance door ThermoSafe style 693

▶ T-ribbed in Silkgrain Anthracite grey RAL 7016 style 501 with continuous inlays in stainless steel look

▼ D-ribbed in Silkgrain Anthracite grey RAL 7016; Hörmann aluminium entrance door ThermoCarbon, style 304 Anthracite grey RAL 7016

▲ T-ribbed style 501 in Silkgrain Stone grey RAL 7030 with continuous inlays in timber look

▲ Panelled with solid timber panels in Hemlock with wood preservative in Limestone white

▶ Panelled in Decograin Golden Oak

◀ Panelled in Woodgrain Traffic white RAL 9016; Hörmann aluminium entrance door ThermoSafe style 449 in Traffic white RAL 9016

ALR F42 for on-site cladding flush with the facade

Design your sectional door according to your wishes with timber, metal, ceramics, plastic and many other materials. This way your garage door is seamlessly integrated into the overall design of your home.
The door basis for facade cladding is a Hörmann industrial sectional door ALR F42 with an aluminium frame construction and PU sandwich infill. Please consult with your local Hörmann specialised dealer.

▶ Sectional door ALR F42 with on-site cladding

▼ Sectional door ALR F42 Vitraplan

ALR F42 Vitraplan

The door is especially elegant thanks to offset, flush-fitting glazing. The frame profile is concealed, so nothing detracts from the overall appearance. This exclusive door convinces with a mix of mirroring and transparency.

◀ Aluminium frame door ART 42 Thermo with synthetic double pane, grey tinted

ART 42 / ART 42 Thermo
■ NEW

You have the choice between 11 infill variants for the Hörmann aluminium frame door. These offer more light in your garage or better ventilation in the parking boxes of collective garages with a perforated or mesh infill.

◀ Door style 402 in Nordic Pine with a matching side door

▶ Door style 405, painted white on site with hinged door fitting kit and decorative handles

▼ Door style 403 in Nordic Pine with Tropical green natural stone

Individual designs

Design your timber door to, for example, display your initials, house number or your favourite style. Just provide us with an appropriate drawing and we will create a personal garage door for you. It will be an enviable original.

Colour and decor variety

No matter the architectural style, with Hörmann, you are guaranteed to find a sectional garage door to fit your personal style and home. For steel sectional doors, you can choose from 15 equally-priced preferred colours, approx. 200 RAL colours, 6 Decograin decors and 24 Duragrain decors.

The door surfaces are optimally protected against rust, allowing you to enjoy your new door for a long time. Rain runs off without leaving any streaky marks thanks to the use of hot-galvanized material and a high-quality polyester-primer coating on both sides.

Solid timber doors are available in two types of timber, each of which can be glazed in one of 8 colours to match your home.

 ▶ L-ribbed in Duragrain Walnut Terra ■ **NEW**

Only from Hörmann

with high-strength protective coating

Versatile and permanently beautiful

For the Duragrain surface finish with its detailed, natural and colourfast door surface, you can choose from 24 decors. In this collection you are guaranteed to find a decor that harmonises perfectly with the architecture of your home.
The innovative digital printing process in combination with the final high-strength protective coating is the basis for a permanently beautiful door view.

24 Duragrain decors ■ **NEW**

DURAGRAIN
MAXIMUM SCRATCH RESISTANCE

1

2

7

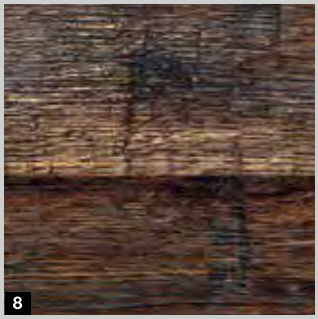
8

13

14

19

20

1	Concrete	2	Beige
7	Bamboo	8	Burned Oak
13	Noce Sorrento Balsamico	14	Noce Sorrento, plain
19	Terra Walnut	20	Colonial Walnut

For further information, see the “Duragrain surface finish” brochure.

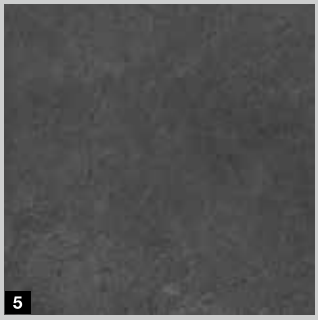

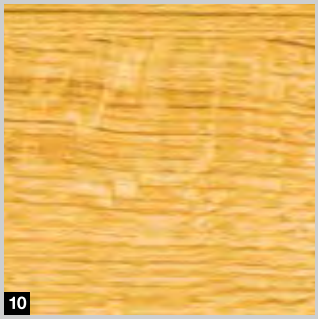

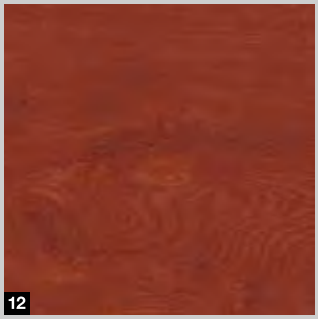

- 3 Mocca
- 4 Grigio
- 5 Grigio scuro
- 6 Rusty Steel
- 9 Cherry
- 10 Nature Oak
- 11 Pine
- 12 Rusty Oak
- 15 Sapele
- 16 Sheffield
- 17 Teak
- 18 Weathered Look
- 21 White Brushed
- 22 White Oak
- 23 White Oiled Oak
- 24 Whitewashed Oak

Please note:

Duragrain doors are generally supplied in Grey white, RAL 9002, on the inside of the door. When the door is opened, a thin Grey white stripe can be seen between the sections on the outside.

Side frames and fascia panels are delivered in Woodgrain, Traffic white RAL 9016 as standard. Optionally, you can obtain lintel and frame fascias in a colour matching the decor.

Elegance and detailed accuracy

Decograin is available in five natural-looking timber designs and with an anthracite metallic effect. An embossed wood grain gives it an authentic timber character. The door remains beautiful for a long time thanks to the special surface protection of the UV-resistant plastic film coating on the outside of the steel sections.

6 Decograin decors

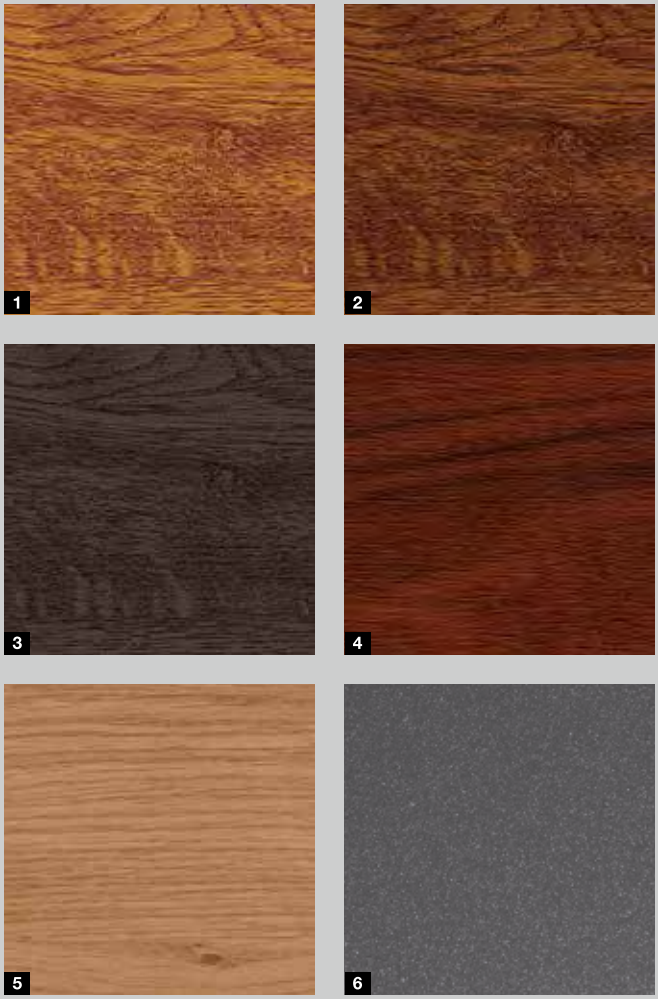

1 Decograin Golden Oak: medium brown, golden yellow oak design
2 Decograin Dark Oak: walnut-coloured oak decor
3 Decograin Night Oak: dark, intense oak design*
4 Decograin Rosewood: mahogany-coloured timber design*
5 Decograin Winchester Oak: natural-coloured knotty oak design*
6 Titan Metallic CH 703: Anthracite with a metallic effect

* Not for LPU 67 Thermo

Beautiful and protective colour

Double-skinned LPU sectional doors and side doors are available as standard in Traffic white, RAL 9016, as well as in 15 inexpensive preferred colours and in around 200 colours from the RAL colour chart*, as well as in many NCS and DB colours.
You can choose from 3 preferred colours** for the surface finish Sandgrain.
Single-skinned LTE 42 doors are only available in Traffic white.

Standard colour

15 preferred colours

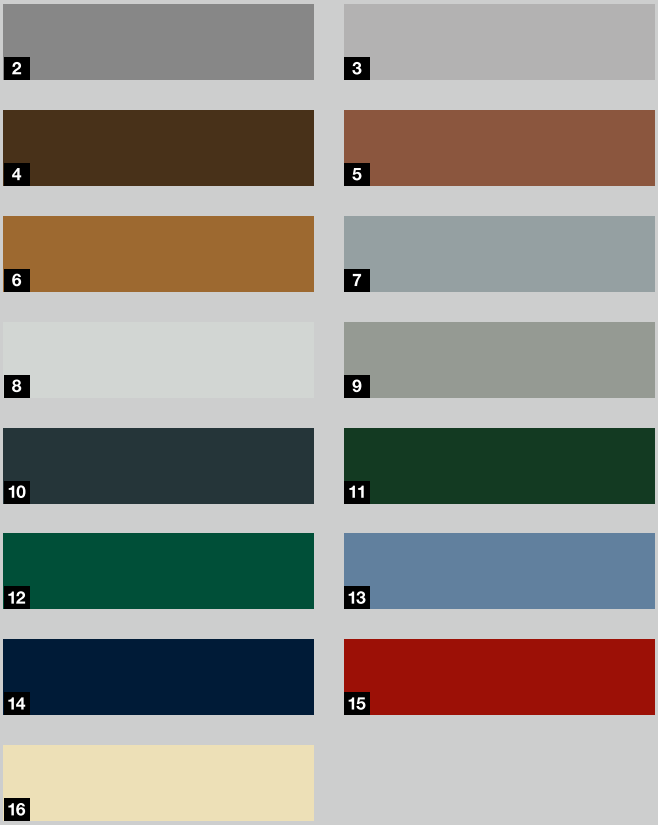

1	RAL 9016	Traffic white
2	RAL 9007	Grey aluminium
3	RAL 9006	White aluminium**
4	RAL 8028	Terra brown**
5	RAL 8003	Clay brown
6	RAL 8001	Ochre brown
7	RAL 7040	Window grey
8	RAL 7035	Light grey
9	RAL 7030	Stone grey
10	RAL 7016	Anthracite grey**
11	RAL 6009	Fir green
12	RAL 6005	Moss green
13	RAL 5014	Pigeon blue
14	RAL 5011	Steel blue
15	RAL 3003	Ruby red
16	RAL 1015	Light ivory

Please note:

Sectional garage doors are generally supplied in Grey white, RAL 9002, on the inside of the door.

Dark colours should not be used for double-skinned steel doors that are exposed to the sun, as possible section deflection may damage the door.

All colours based on RAL.

The colours and surfaces shown are subject to the limitations of the printing process and cannot be regarded as binding. Please consult with your local Hörmann specialised dealer.

* RAL Classic colours, with the exception of pearl-effect, fluorescent and metallic colours
** Preferred colours for Sandgrain surface finish

Natural types of solid timber

The LTH garage sectional doors in the Nordic Pine and Hemlock wood types are available in two attractive finishes: impregnated with a smooth surface finish and the new brushed surface finish, which gives the wood grain a visual and haptic appeal. Both surface finishes are optionally available with 8 wood preservatives or in a white covering coating.

Please note:

The timber is impregnated at the factory to protect it against insect and fungal attack. To protect it from weathering and retain its beautiful appearance, please treat the timber with a wood preservative.

With wood preservatives, the wood content may show through the coating, leading to a change in the surface colour.

8 types of wood preservative

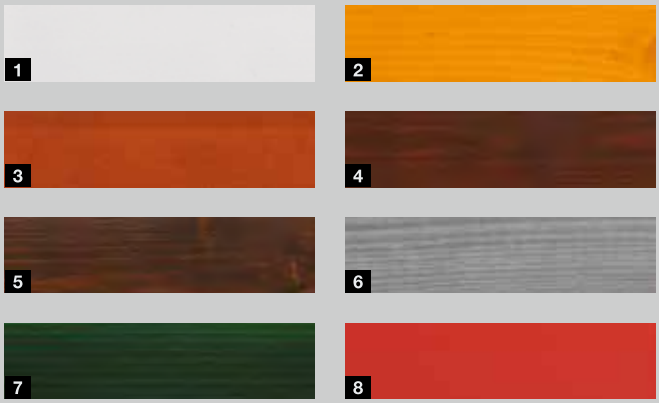

1 Limestone white, painted or opaque
2 Pine
3 Teak
4 Rosewood
5 Ebony
6 Agate grey
7 Fir green
8 Nordic red

Brushed surface ■ **NEW**

The brushed timber surface finish allows you to feel what you see. Brushing the surface removes the soft timber parts, leaving the harder timber fibres. They make for an especially grooved surface texture, reinforcing the natural effect of the timber. The surface finish is available for all sectional garage doors LTH and side doors (except V-panel).

Aesthetic, understated, secure

Manual release

If your garage does not have a second entrance, you can optionally open your automatic garage door LPU 42, LTE 42 and LTH 42 from the outside with a beautifully designed handle or an understated emergency release lock.

Door handles

Hörmann door handles are set apart by a contemporary, modern shape. Here, the selection of material is not just a question of personal taste. For example, stainless steel handles are particularly robust and have a tough surface finish. The lock can be integrated in the master key system. Manually operated doors with a handle are locked with a latch lock 7, providing break-in resistance. In this lock, a sturdy, automatic latching spring disc engages around a massive bolt on the side frame.

Emergency release

If you do not want a handle on your automatic sectional door, we recommend using an emergency release lock 6 on garages without a second entrance. An inconspicuous round cylinder (cannot be integrated in the master key system) releases your garage door and you can easily open it in the case of an emergency.
For automatic sectional doors with a handle, you can use a door handle to operate the emergency release. The door is then unlocked via a Bowden cable on the inside.

1

2

3

4

5

6

7

1 Black plastic
2 White cast aluminium, RAL 9016
3 Silver cast aluminium
4 Brushed stainless steel
5 Brown cast aluminium, RAL 8028
6 Emergency release lock
7 Latch lock

For sectional doors LPU 42, LTE 42 and LTH 42

Please note:

All colours based on RAL.

More light, less energy consumption

Only from Hörmann

Duratec plastic glazing

Depending on the door type, you can select from various types of glazings with clear or textured panes. Clear synthetic glazing from Hörmann comes as standard with DURATEC glazing. It offers:

- Maximum scratch resistance
- A permanently clear view
- Improved thermal insulation

Your Hörmann partner would be pleased to advise you about the numerous glazing options. The glazing frames are supplied in a colour to match the decor with the Decograin surface finish.

Synthetic double pane, clear

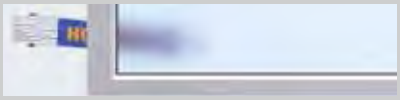

Synthetic double pane, crystal texture

1	Glazing type D [1]	2	Aluminium frames [2]
3	Classic glazing S0 [1]	4	Classic glazing M0 [1]
5	Classic glazing L0 [1]	6	Classic glazing S1
7	Classic glazing S2	8	Sunrise glazing S10 [3]
9	Sunrise glazing S60 [4] (Fig. left door half)	10	V-panelled glazing V0

Glazings (1 to 8, 10) correspond to a door width of 2500 mm

[1] Individual arrangement of glazings is possible
[2] Rails are possible
[3] Door width 2130 – 2750 mm
[4] Door width 4751 – 5500 mm

Please note:

Glazing is also possible in the two bottom door sections after technical inspection.

Only from Hörmann

An easy passage into your garage

A wicket door in the garage door lets you easily access whatever you need from your garage, for example gardening tools, bikes or wheelbarrows. Only Hörmann offers wicket doors with a stainless steel threshold that is only 10 mm in the centre and 5 mm at the sides. This reduces the risk of tripping and makes it easier to wheel things through. The aluminium door frame is anodised as standard in a natural finish and is also available in all RAL colours. The top garage door section comes with a continuous lintel seal, also in the wicket door area.
Doors with wicket door are available with a door width of up to 5 m.

Please note:

Wicket doors with trip-free threshold are only available for sectional door LPU 42.

On request, Decograin wicket doors can be supplied with the frame painted to match the colour of the decorative finish. The frame is available in all RAL colours, also different from door colour.

In some cases, adjacent panelled doors with the same width, with and without a wicket door, may not have an identical panel division.

Manually operated garage doors with wicket door do not have an exterior door handle. They are locked from the inside.

1 Overhead door closers

As standard, wicket doors are supplied with slide rail door closers incl. integrated opening angle limit and hold-open device (top Fig.).
An integrated door closer, including hold-open device (bottom Fig.) is optionally available for optimum protection and the best appearance.

2 Optional multiple-point locking

The wicket door is locked over the entire door height with one bolt and hook bolt per section. The advantage: better stability and improved break-in resistance.

3 Robust door catch

This prevents door leaf dropping and warping.

4 Concealed hinges

For a uniform door appearance, the wicket doors are equipped with concealed hinges as standard.

Optional photocell

The leading photocell VL 2 stops the door without contact. This further increases the safety of your garage door with wicket door and trip-free threshold.

Garage side doors NT60

The doors are supplied ready-to-fit with profile cylinder mortise lock, round handle / lever handle set with oval rose escutcheons and 3-way adjustable hinges. The leaf frame is available in a narrow (profile type 1) or a wide (profile type 2) version. The frame is made of weather-proof aluminium extrusions (depth 60 mm) with all-round seals. Double-leaf side doors are also available with asymmetrical division, i.e. with uneven door leaf widths.

Garage side door NT60	Single-leaf	Double-leaf
Aluminium block frame	●	●
Aluminium corner frame	●	–
Narrow leaf frame (profile type 1)	●	–
Wide leaf frame (profile type 2)	●	●
Air permeability	Class 2*	–
Resistance to wind load	C2 / B2*	–
Thermal insulation U-value in W/(m²·K)	2,7	2,9

* Tested for door with wide leaf frame (profile type 2)

● = Equipment options

For further information, see pages 94 / 95 or contact your Hörmann partner.

Single-leaf NT60 with narrow leaf frame (profile type 1)

Single-leaf NT60 with wide leaf frame (profile type 2)

Double-leaf NT60 with wide leaf frame (profile type 2)

Insulated version NT80

The garage side doors TopComfort NT80 impress with an aluminium profile system with thermal break, frame and threshold rail, as well as a depth of 80 mm.

Garage side doors with thermal break TopComfort NT80

1 Lever handle set

Choose between the standard lever handle or many optional lever handle or lever / knob handle sets (Fig: stainless steel lever handle set).
Your Hörmann partner would be pleased to advise you.

2 Concealed hinges ■ NEW

For an elegant door view of the single-leaf side doors in the version with aluminium block frame optional concealed hinges are available (from autumn 2019).

3 Fixed bolt

The fixed leaf on double-leaf side doors can be individually locked.

4 Matching

Decograin side doors come with identical surface finish for the frame, subframe and door to create a matching appearance. The inside of the sections is Grey white, RAL 9002, as standard.

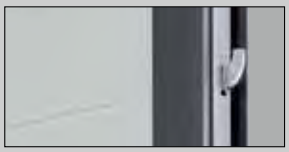

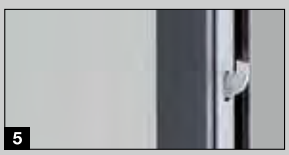

5 Break-in-resistant

You can also optionally equip side doors NT60 with a wide leaf frame (profile type 2) in RC 2 security equipment with 3-point locking (latch, bolt, 2 locking hooks) and security rose escutcheon.

MZ Thermo multi-purpose door

If you value good thermal insulation and also want to reduce the risk of condensation forming on the inside, an MZ Thermo external door with thermal break is the best choice for you.
It has an excellent thermal insulation value of 1.2 W/(m²·K).
An RC 2 version is optionally available (KSI Thermo).

For further information, see the “Steel doors” brochure.

Out with the old, in with the new

At some point it is simply time to modernise your garage door. Hörmann can provide you with an attractive and appropriate solution for any fitting situation. Inexpensive standard sizes, especially created for modernisation, will save you money and make it possible to install your new sectional door faster. Your Hörmann partner also provides you with a complete package of services:

- Qualified consultation
- Measurement on-site
- Professional fitting
- Removal and environmentally-friendly disposal

Your Hörmann partner would be pleased to advise you on-site.

HÖRMANN
Tore · Türen · Zargen · Antriebe
GT JA 19

1

Standard fitting 1

Ideally, the available garage has at least 100 mm of clearance in the lintel area (at least 115 mm for doors with operators) and a 90 mm sideroom. The frame can then be screwed directly into the wall behind the opening.
Hörmann sectional doors come with all the necessary fitting materials.

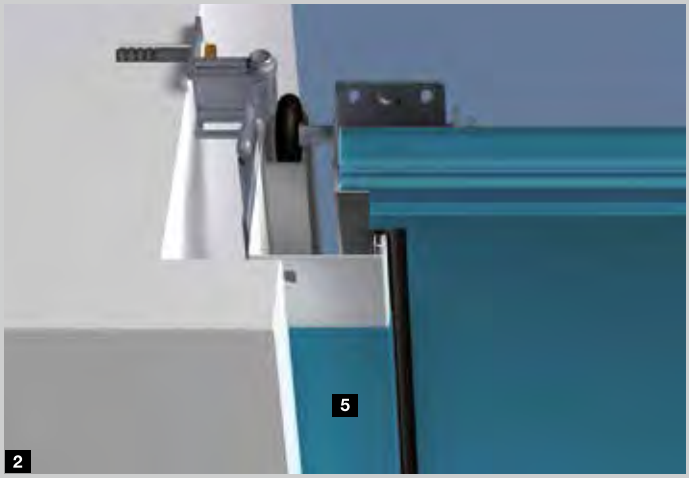

2

Special anchor for frame side fixing

The sectional door frame can be fitted to the side wall of the garage with Hörmann's optional, universal anchors. Irregularities in the wall can be easily compensated, leaving the reveal intact.

2 Fitting with up to 35 mm wall spacing

3 Fitting with angled or irregular side wall

4 Fitting with non-load bearing facades (facing brick or thermal insulation) with at least 90 and max. 125 mm sideroom

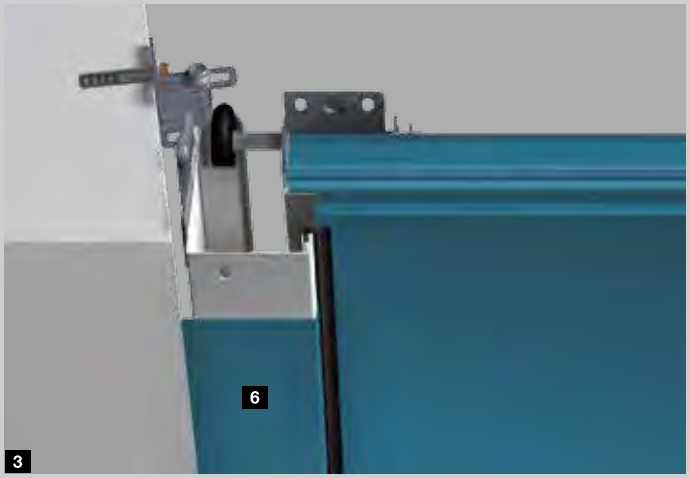

3

Frame covering in the colour of the door

At Hörmann, side frames are delivered in Woodgrain surface white as standard. With an optional frame covering that matches the door sections' surface finish and colour or decor, your door will become even more beautiful. Now you can enjoy the identical view of door sections and frame. For Duragrain doors, we optionally supply the frame cladding in a colour that matches the decor. Two different widths make it possible to cover the side frame for different fitting situations.

5 55-mm-wide frame covering for fitting behind the opening, with little sideroom (< 90 mm)

6 90-mm-wide frame covering for fitting in the opening, flush with the wall

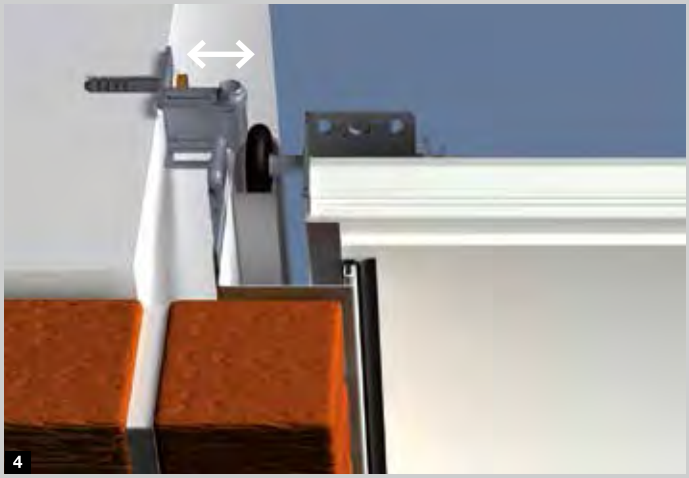
4

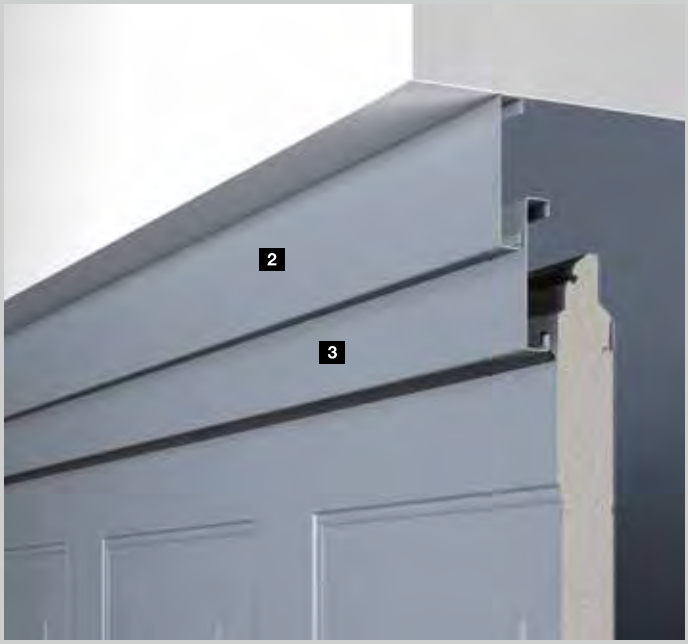

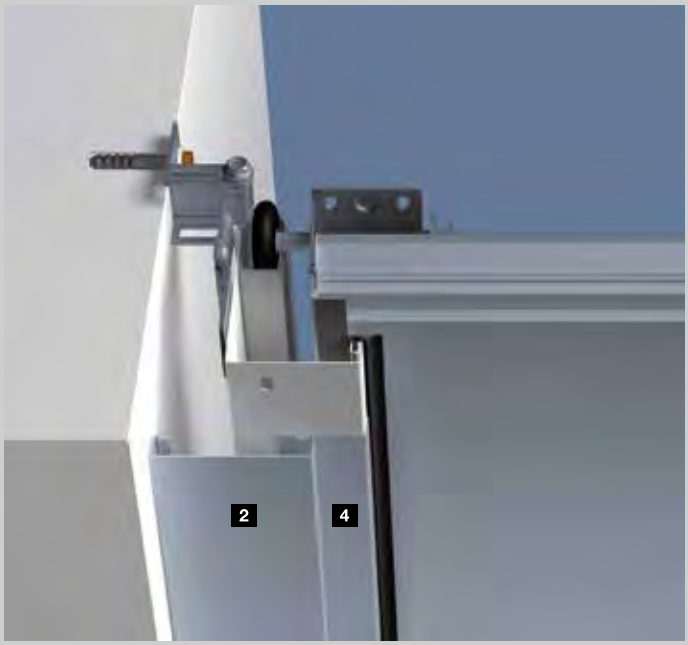

Fascia panels 1

For greater distances between the side wall or ceiling and the door frame, the gap is sealed with panels in the appearance of the door sections. This creates a harmonious overall impression because the door style continues over the frame. Fascia panels are available for all door styles, each in the same surface finish and colour or decor of the door section, and also with design elements.

Fascia frame set 95 for lintel and side wall

A door in an inexpensive standard or modernisation size can be fitted in the opening. The remaining gap between the side wall or lintel and door frame (max. 35 mm) is covered using an optional fascia frame set 2. This set comes with fascia panels in the surface finish and colour or decor of the door sections, end caps and fixing materials. For Duragrain doors, we supply the panel frame set in a colour that matches the decor.
For the surface finishes Woodgrain, Sandgrain, Silkgrain and Decograin, our standard fascia panels 3 match the surface finish and colour or decor of the door. For Duragrain doors, the lintel comes as standard in Woodgrain, Traffic white or optionally in a colour matching the decor. The side frame is additionally covered with an optional frame cladding 4 (see page 62 for details).

1

Fascia panels for standard fitting behind the opening with small lintel space 1

For the surface finishes Woodgrain, Sandgrain, Silkgrain and Decograin, our standard fascia panels always match the door surface finish and colour or decor and can thus be visibly mounted in the opening. For Duragrain doors, we supply the panels in Woodgrain Traffic white as standard. The lintel optionally comes in a colour matching the decor.

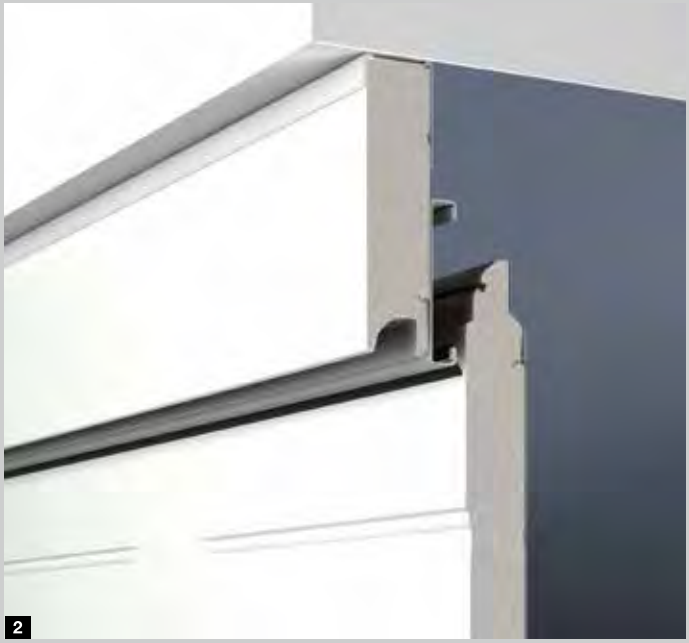
2

Double-skinned fascia panel for fitting in the opening with larger gap to the ceiling 2

A matching, double-skinned additional fascia panel covers the gap between the ceiling and fascia panel. It is available for all surface finishes and colours or designs. Glazings are also possible after technical inspection.
This panel can be optionally supplied as an aluminium light strip.

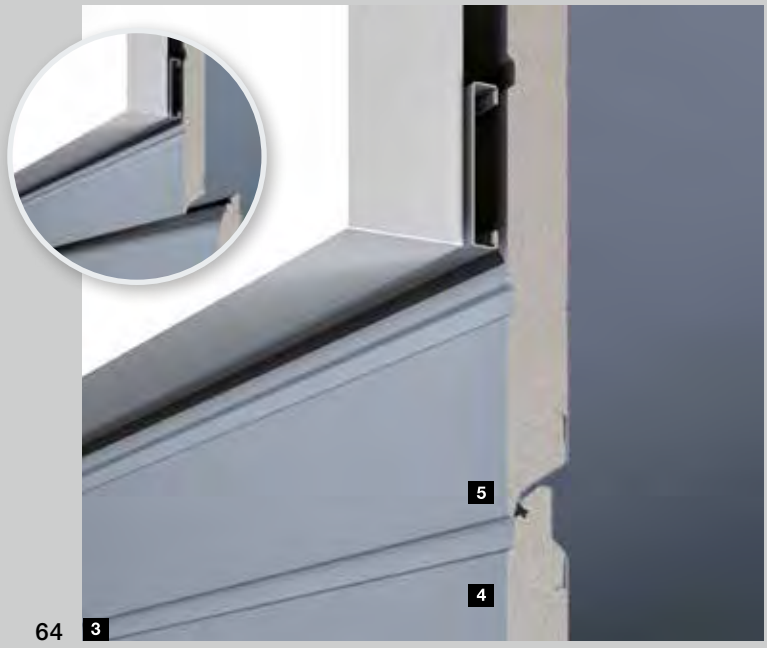

3

Flush-fitting fascia panels 3

For LPU 42 doors, a flush-fitting fascia panel is the most elegant solution for an invisible transition between the panel and door leaf. When the door is closed, the top door section 4 is flush with the panel 5. It is available for all door styles in all surface finishes (except Duragrain) and colours or decors (panelled on request).

For more detailed information, please see the fitting data or contact your Hörmann partner.

Retrofit fascia set to properly cover damaged wall edges 1

Unattractive gaps in the lintel and opening areas can be covered easily with the optional retrofit fascia. Additional brickwork and plastering work are no longer required.
The set with 3 fascia panels (each 3 metres long) is available in all surface finishes and colours or decors to match the door. For Duragrain doors, we supply the panels in a colour that matches the decor.

Recess set 2

When removing an old up-and-over door and fitting a new LPU 42 sectional door, a time-consuming process is often necessary to remove the threshold rail or straighten the ground. With the recess set, these steps can be omitted as the sectional door is positioned in front of the threshold rail. The set consists of a compensation profile 3 and special track applications. The frame must be shortened by 25 mm if the set is used. This can either be ordered in the desired dimensions or shortened on-site.

Wind threshold 4

The profile is simply fitted to the floor and seals off the door bottom edge additionally. It prevents the penetration of water across the full door width. The low height ensures barrier-free access.

For more detailed information, please see the fitting data or contact your Hörmann partner.

Reliable, safe and maintenance-free

Hörmann garage door operators perfectly match your Hörmann sectional door. The result: simple operation, maximum convenience and the greatest operational safety.

The automatic safety cut-out stops the door securely and reliably if it encounters an obstacle. Your door opens and closes quietly and smoothly with the soft start and soft stop. Our elegant hand transmitters allow you to open your gate from your car as easily as you would operate a TV. You can also operate your door using stationary control elements, such as a radio code switch or radio finger-scan.

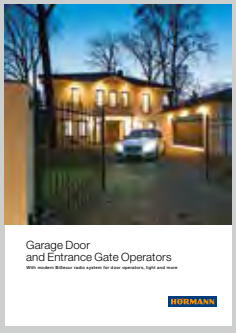

More information can be found in the Garage door and entrance gate operators brochure.

SupraMatic – the supra-fast operator with many additional functions

- As standard with 5-button hand transmitter HS 5 BS and 4-button hand transmitter HSE 4 BS
- Query of the door position
- Low power consumption
- Easy to program
- 2x 7-segment display
- Separately switchable LED lighting with energy efficiency class A++
- Adjustable ventilation slot
- Automatic door locking
- Operator cover made of brushed aluminium
- The automatic safety cut-out stops the door immediately if it encounters an obstacle
- Soft start and soft stop ensure smooth running and increase the service life of the door

HS 5 BS black textured surface with chrome caps

HSE 4 BS textured black with plastic caps

Garage door operators	SupraMatic E	SupraMatic P
Special feature		For timber doors and doors with wicket door
Equipment		Photocell
Cycles per day / hour	25 / 10	50 / 10
Pull and push force	650 N	750 N
Peak force	800 N	1000 N
Max. opening speed	22 cm/s	22 cm/s
Max. door width	5500 mm	6000 mm
Max. door surface	13.75 m²	15 m²

* The complete warranty conditions can be found at: www.hormann.co.uk

ProMatic – the good-value starter model as an introduction to Hörmann's premium quality

- As standard with two 4-button hand transmitters HSE 4 BS
- Adjustable ventilation slot
- Automatic door locking
- LED lighting with energy efficiency class A++
- The automatic safety cut-out stops the door immediately if it encounters an obstacle
- Soft start and soft stop ensure smooth running and increase the service life of the door

ProMatic Akku for garages without a power connection

HSE 4 BS textured black with plastic caps

- Standard hand transmitter and functions as with the ProMatic
- Optional solar module for recharging

Garage door operators	ProMatic**	ProMatic Akku**
Special feature		For garages without power connection
Cycles per day / hour	12 / 5	5 / 2
Pull and push force	600 N	350 N
Peak force	750 N	400 N
Max. opening speed	14 cm/s	13 cm/s
Max. door width	5000 mm	3000 mm
Max. door surface	11.25 m²	8 m²

ProMatic Akku with solar module

* The complete warranty conditions can be found at: www.hormann.co.uk
** Not for LPU 67 Thermo

Mobile and stationary

With Hörmann, everything fits together. Using a hand transmitter, radio finger-scan or radio button you can operate your garage door as well as an entrance gate equipped with a fully compatible Hörmann operator or other devices with Hörmann receivers.
With the new Hörmann BlueSecur app, you can conveniently operate your garage or entrance gate as well as entrance door locks and internal door operators via Bluetooth* with your smartphone.
Customise the user interface individually to your wishes. In addition, other user permissions** can be permanently or temporarily transferred to other smartphones, so that every family member always has their door and door opener with them.

* In conjunction with an internal or external Hörmann Bluetooth receiver
** In-app purchases may be necessary

Hand transmitter HS 5 BS
4 button functions plus query button
1 High-gloss surface black or white
2 Textured surface black

Hand transmitter HS 4 BS
4 button functions
3 Textured surface black

Hand transmitter HS 1 BS
1 button function
4 Textured surface black

Hand transmitter HSE 1 BS
1 button function, including eyelet for key ring
5 Textured surface black

Hand transmitter HSE 4 BS
4 button functions, incl. eyelet for key ring
6 Textured surface black with chrome or plastic caps

Hand transmitter HSE 2 BS
2 button functions, incl. eyelet for key ring
7 High-gloss surface black or white
8 High-gloss surface green, purple, yellow, red, orange
9 Decor in silver, carbon, dark rootwood

(Shown from left to right)

10 11

10 Hand transmitter HSD 2-A BS
Aluminium look,
2 button functions,
can also be used as
a key ring

11 Hand transmitter HSD 2-C BS
High-gloss chrome,
2 button functions,
can also be used as
a key ring

12

12 Hand transmitter HSP 4 BS
4 button functions,
with button lock-out,
incl. key ring

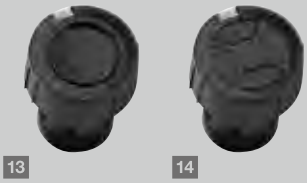

13 14

13 Hand transmitter HSZ 1 BS
1 button function,
for insertion in vehicle
cigarette lighter

14 Hand transmitter HSZ 2 BS
2 button functions,
for insertion in vehicle
cigarette lighter

HSZ hand transmitter

The alternative to homelink systems: integrated in an inconspicuous spot in your car. Inserted in the vehicle's cigarette lighter, the HSZ hand transmitter is easily accessible and convenient to operate.

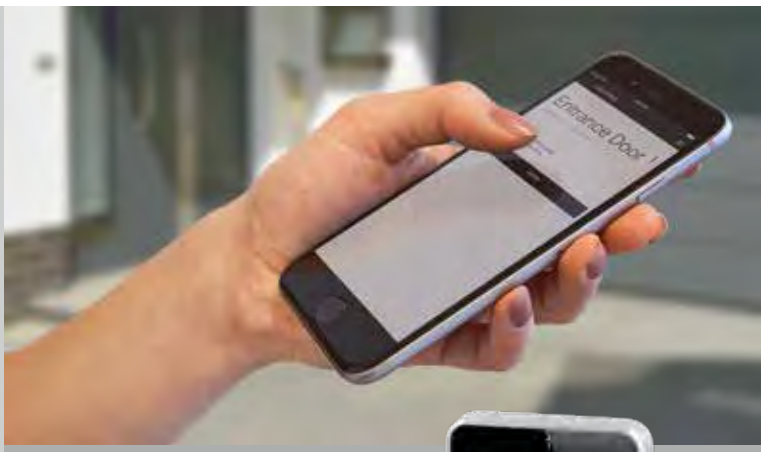

Access control system LightAccess
■ NEW

With the simple access control system LightAccess you can open your doors and gates via LightPass with your smartphone.
An alternating colour code on the display is scanned by the reader and opens the door or gate. Via the LightPass app or the LightPass website, you can conveniently send 12 permanent and 6 time-limited access codes to your family and friends online via e-mail or text message. The obtained link with the colour code is retrieved in the browser of the mobile phone. No software needs to be installed on the mobile phone and the recipient of the code obtains quick and easy access.

Easily manage access codes on a computer or via app on your smartphone or tablet

Send access codes (limited or permanent) via e-mail or text message to virtually any smartphone with a colour display and web browser

Open the door by scanning the changing mobile phone colour code using the reader

Please note: Photosensitive seizure warning

A very small percentage of people may experience a seizure when using this software due to rapid flashing lights on the screen, upon device activation. Even people who have no history of seizures or epilepsy may have an undiagnosed condition that can cause these "photosensitive epileptic seizures".
These seizures may have a variety of symptoms, including lightheadedness, altered vision, eye or face twitching, jerking or shaking of arms or legs, disorientation, confusion, or momentary loss of awareness. Seizures may also cause loss of consciousness or convulsions that can lead to injury from falling or striking nearby objects. Immediately stop using the software and consult a doctor if you experience any of these symptoms. The risk of photosensitive epileptic seizures may be reduced by taking the following precautions:
- Use in a well-lit area
- Do not use if you're drowsy or fatigued
If you or any of your relatives have a history of seizures or epilepsy, consult a doctor before using this software.

Radio code switch
FCT 3 BS
For 3 functions,
with illuminated buttons

Radio code switch
FCT 10 BS
For 10 functions
with illuminated buttons and protective cover

Radio finger-scan
FFL 12 BS
For 2 functions and up to 12 fingerprints

Recessed radio transmitter
For recessed buttons with up to two functions, central installation in the house within sight of the garage door

HSU 2 BS:
for switch boxes with Ø 55 mm with connection to the house mains supply
FUS 2 BS:
for switch boxes with Ø 55 mm including 1.5 V battery

Radio internal push button
FIT 2-1 BS
For 2 functions, connection option for maximum 2 control elements via cable, e.g. Key switches

Radio internal push button
FIT 1 BS
1 button function with large button for simple operation

Radio internal push button
FIT 4 BS
4 button functions

Radio internal push button
FIT 5 BS
4 button functions plus query button

Radio receiver electric socket
FES 1 BS
For switching lights and other devices on and off up to 2500 watts
FES 1-1 BS
For controlling (impulse) operators of other makes and switching lights and other devices on and off up to 2500 watts

Key switches
1 STUP 50
2 STAP 50
In a recessed version and surface-mounted version, including 3 keys

Transponder key switch
TTR 1000-1
For 1 function, for 1000 teachable keys, 1 key in scope of delivery (more on request)

Code switches
CTP 3-1
For 3 functions, with illuminated lettering and touch-sensitive black surface

Code switches
CTR 1b-1 / 3b-1
For 1 or 3 functions

Code switches
CTV 3-1
For 3 functions, particularly robust with metal keypad

Internal push buttons
IT 1b-1
Large, illuminated button for convenient opening of the door

Internal push buttons
IT 3b-1
Large button with illuminated ring for opening of the door, buttons for the operator light and to switch off the radio control (only for SupraMatic)

Photocell EL 101
One-way photocell system, immediately stops the door when the light beam is interrupted

Emergency battery HNA
for garage door operators
Emergency power supply to bypass power failures up to 18 hours and max. 5 door cycles, recharges during normal operation, for all current Hörmann garage door operators

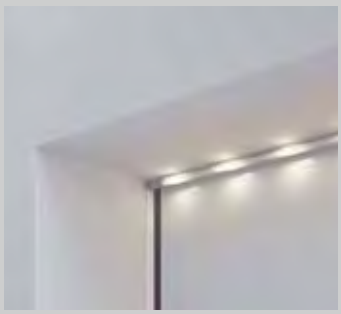

LED light strip
Neutral white light, variable plug-in system, can be fitted to lintel or bottom edge of door leaf, LED spacing: 125 mm, energy efficiency class A

Optimum ventilation of the garage can effectively prevent mould

It is very important to ventilate the garage regularly; especially if insulated garage doors are fitted in poorly insulated garages. Ventilation is achieved by folding down the top section (optional equipment) top prevent dirt, leaves or small animals from entering the garage. An additional climate sensor, which automatically regulates ventilation, is recommended for energy-efficient ventilation.

1

2

3

1 Ventilation slot on the topmost section

The optional folding roller bracket means that you only open the top section of your door to ventilate the garage. The bottom door section remains sealed on the ground, thus offering protection against small animals or leaves. The ventilation slot is operated using the “2nd opening height” operator function on doors with operator*.
The folding roller bracket is optionally available on all sectional garage doors LPU 67 Thermo* and LPU 42* with operator and can be retrofitted on all sectional garage doors LPU 42* with operator SupraMatic or ProMatic (from year of construction 2012).

2 Inside climate sensor HKSI for automatic garage ventilation

The inside climate sensor for operators SupraMatic 3 (from Index C) and WA 300 S4 (from Index D)** monitors humidity in the garage and regulates the ventilation. If humidity is too high, the door is automatically opened using the “2nd opening height” operator function and then automatically closed again once humidity is adjusted.
For optimum operation, the temperature range in which the door does not open (e.g. if there is a risk of frost in the garage), the operating times (e.g. overnight shut-off) and opening times (e.g. max. 2 hours per ventilation) can be adjusted.
The optional external sensor HKSA additionally measures the humidity outside and prevents the door from opening in case of high humidity levels. An on-site fan can also be installed for fast and effective ventilation.

* Only track application N, L, Z, not possible for doors with wicket door

** A photocell is required on doors without ventilation slot if the door closing edge is 30 mm or more above the floor in the ventilation position.

Take a look at the video “Automatic garage ventilation” at: www.hormann.co.uk/videos

Operating comfort with the highest security

Safety while operating the garage door is top priority for Hörmann. And Hörmann sets the standards for this with its innovative solutions. This has been proven time and time again through numerous Hörmann patents. Hörmann sectional doors are tested and certified in accordance with the high safety requirements of European standard 13241, not only on their own but also in combination with Hörmann operators. It would be hard to find a safer sectional door.
This provides you and your family with safety during daily use.

It pays to compare!

Hörmann patent

Hörmann patent

Hörmann patent

1 Tension spring assembly with spring-in-spring system

Double tension springs and double cabling on each side safeguard the door leaf against falling. Thanks to the patented spring-in-spring system, broken springs are prevented from flying out and causing injuries. Sectional doors up to 4000 mm wide or 2625 mm high include the proven tension spring technology as standard*.

2 Torsion spring assembly with integrated spring safety device

Torsion springs on both sides feature a patented spring safety device. In the event of a spring breaking, they arrest the door immediately, thereby preventing the door leaf from falling Larger sectional doors and doors with integrated wicket door or solid timber panels feature torsion spring technology.

3 Secure guidance of the door in safety tracks

Patented, adjustable rollers, sturdy roller holders and safety tracks ensure that there is no danger of the door “derailing”. The door sections are safely parked under the ceiling.

4 Finger trap protection on the inside, outside and on the hinges

The unique form of the door sections eliminates trap points. Both between the sections and on the hinges.

5 Trap guard on the side frame

With Hörmann, the frames are completely closed from top to bottom. There are no gaps between the door leaf and frame in which fingers could get trapped!

* Please refer to the size range on page 88 for detailed information.

For a beautiful interior door appearance

The premium version of the LPU 42 and LPU 67 thermo doors impresses with its harmonious interior view. The fittings, frames, rails and connecting rails are designed to match the inside of the sections. Tandem track rollers also ensure very quiet and gentle door travel.

Standard version (Fig. LPU 67 Thermo)
Galvanized fittings, frame, tracks and connection rails

Premium version (Fig. LPU 67 Thermo)
Fittings, frames, tracks and connection rails in Grey white RAL 9002* and tandem track rollers

* Galvanized spring assembly incl. holder, spring safety device, cable drum, operator boom

The energy-saving door

LPU 67 Thermo is the best choice for you, if your garage is directly integrated in the house or if you use the room as a workshop or hobby room. Thanks to excellent thermal insulation, it meets all the needs of a multi-purpose room you can feel comfortable in.

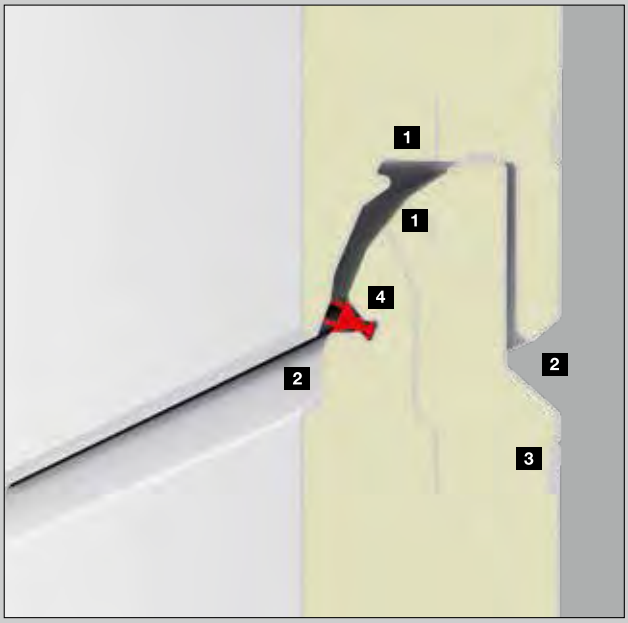

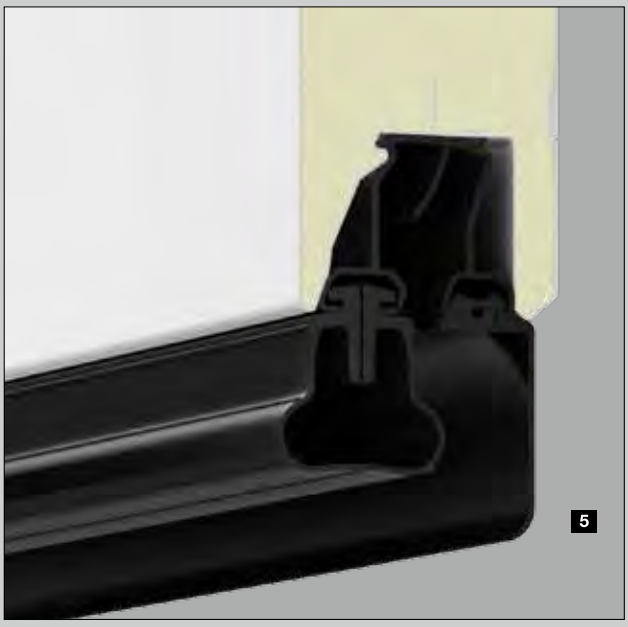

Standard version
with excellent thermal insulation

- **U-value of sections: 0.33 W/(m²·K)**
- **U-value of door*: 1.0 W/(m²·K)**
- **Up to 30% better thermal insulation compared to a sectional garage door LPU 42**

1 67-mm-thick sections with thermal break
2 Finger trap protection outside and inside
3 Triple sheet steel reinforcement in screw fixing area
4 Double lip seal in the section transitions
5 Double bottom seal

Further equipment options:

- All glazing types available for depth 42 mm
- Aluminium glazing frame with thermal break
- All glazings with triple panes
- Optional ThermoFrame for up to 10% better thermal insulation (U-value of the door*: 0.9 W/(m²·K)), for further information, see pages 82 – 83.

Energy modernisation of existing doors

Even with fitted LPU 42 doors from year 06 / 1999 (BR 40), the 67-mm-thick sections with thermal break can be retrofitted for better thermal insulation without having to renew the frame.

* Door size 5000 × 2125 mm

For door openings up to 7000 mm wide and special fitting situations

The industrial sectional door SPU F42 Plus, available for M- and L-ribbed door styles, is the ideal solution for especially wide garages and for fitting situations where an operator cannot be fitted above the door. For specific fitting dimensions, please see the technical manual for industrial sectional doors.

1 Operator SupraMatic HT

For garage doors over 6000 mm wide, the SupraMatic HT operator is the first choice. The rail-guided operator features the same equipment* and functions as the SupraMatic E, such as soft start and soft stop, adjustable ventilation slot and automatic door locking.

2 Shaft operator WA 300 S4

If it is not possible to install the operator in the garage in the centre with a guide rail, we recommend the shaft operator WA 300 S4 for side fitting. This operator does not require additional headroom. Additionally, it features standard power limit, soft start and soft stop, very high security and quiet door travel.

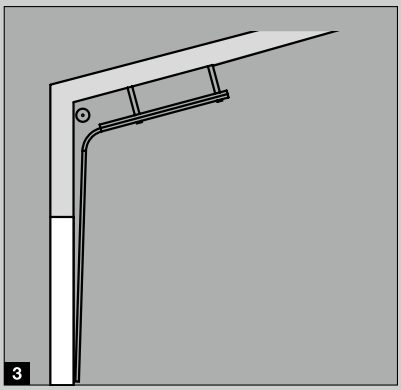

3 4 Track variants for special fitting situations

The industrial sectional door SPU F42 Plus offers a variety of track variants for special fitting situations, e. g. a track application with inclination that you can use to guide your garage sectional door at an incline along the pitched roof of your garage.

Track application HD with inclination

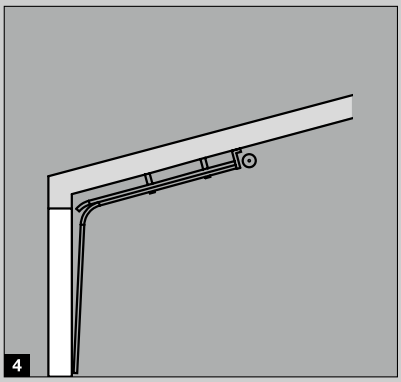

Track application LD with inclination

Additional information can be found in the Industrial sectional doors brochure

* Without operator light

For easy access to the garage

With the new double-leaf hinged garage door, you can either open both leaves or even just one leaf, in order to get your bike out of the garage, for example. The thermally insulated 42-mm-thick sections provide good insulation and are available in all surface finishes.

1

2

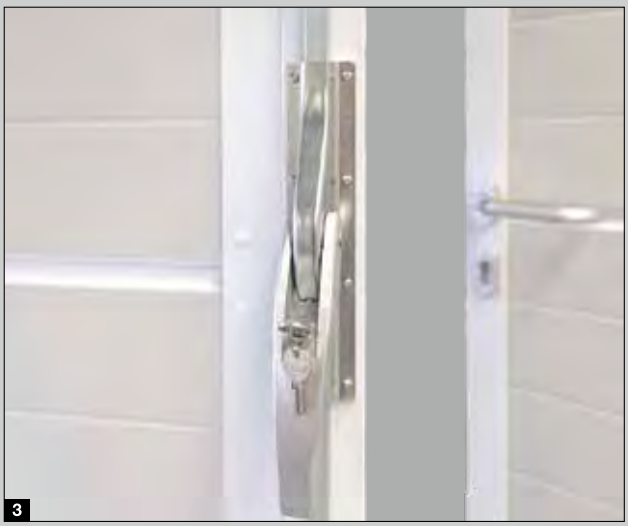

3

1 Customised leaf division

Design your hinged garage door entirely to suit your needs. The door leaves are available in both symmetrical and assymetrical division. The symmetrical division, already with wide door leaves, offer a harmonious door view. In the asymmetrical division, the traffic leaf comes in a width of 870 mm, which allows easy passage into the garage. The width of the fixed leaf results from the total width of the door. You can also choose to position the traffic leaf on the left or right side of the door. Three sturdy hinges per door leaf (one hinge with safety device) also ensure reliable door operation.

2 60-mm-thick aluminium frame profiles

The frame profile seals reliably with a 3-sided double stop seal and double lip seal in the threshold area. The door infill made of 42-mm-thick sections is available in the S-ribbed, M-ribbed, L-ribbed, D-ribbed and T-ribbed styles and in all colours and decors. We supply the smooth aluminium frame profile in the colour of the sections, or in Decograin and Duragrain infills in a colour matching the decor.

3 Secure locking system

For a reliable locking of the door, the traffic leaf is equipped as standard with an aluminium lever handle set and a lock with profile cylinder. The fixed leaf is securely locked using a door bolt. In order to fix the leaves when open, the traffic leaf and the fixed leaf can be equipped with an additional door stay on the floor. A door stay with braking and damping functions fitted on the top edge of the leaf is particularly convenient. It stops the door from slamming and opening and can be locked in any position.

Hinged garage door DFT 42	
Max. width (mm)	3000
Max. height (mm)	2500
Air permeability	Class 2
Water tightness	Class 1
Wind load	Class 3
Thermal insulation U-value in W/(m²·K)	2.9*

* The U-value applies to fitted doors (without glazing) with the dimensions 2200 x 2180 mm

Outstanding performance characteristics

ZERTIFIZIERT

A well-insulated garage door is always recommended when the garage and the home are directly connected. The ThermoFrame frame connection further improves the already high insulation values of the double-skinned Hörmann sectional garage doors.

This reduces your energy costs.

Improved thermal insulation with ThermoFrame

Only from Hörmann

The plastic profile can be easily fitted together with the door frame, creating a thermal break between the frame and brickwork, thus improving thermal insulation by up to 15%*. In addition, extra lip seals on both sides and in the upper section of the door lower the loss of heating energy from the garage interior. The ThermoFrame frame connection is optionally available for all Hörmann sectional garage doors.

* For a double-skinned sectional garage door LPU 42 with the dimensions 5000 x 2250 mm

Thermal insulation

The thick insulated sandwich sections insulate just as well as a brick wall. This means that your garage is not wasting any energy and is saving you real money.

Acoustic insulation

The excellent acoustic insulation for the LPU sections reduces road traffic noise (approx. 80 dB(A)) to room volume level (approx. 55 dB(A)). This way, you can do what you want in your garage, whether you want to work in peace or throw a party.

Wind load

The LPU door sections are extremely sturdy so that your door can even withstand wind forces of up to 120 km/h, equivalent to hurricane force, without a problem. This means optimum protection for your garage and everything in it.

Sealing

Your garage is also well protected from heavy rain. Due to the all-around seals between the door leaf and frame as well as the seals between the sections, virtually no rain can penetrate a closed door.

Performance characteristics according to European standard 13241

Door type	**Thermal insulation**	**Acoustic insulation**	**Wind load** [5]	**Sealing**	
				Air	Water
LPU 67 Thermo		R = approx. 25 dB	Class 3	Class 3 [5]	Class 3 [4]
Section	U = 0.33 W/(m²·K)				
Fitted door without ThermoFrame [1]	U = 1.0 W/(m²·K)				
Fitted door with ThermoFrame [1]	U = 0.88 W/(m²·K)				
LPU 42		R = approx. 25 dB	Class 3	Class 3 [5]	Class 3 [4]
Section	U = 0.5 W/(m²·K)				
Fitted door without ThermoFrame [1]	U = 1.4 W/(m²·K)				
Fitted door with ThermoFrame [1]	U = 1.2 W/(m²·K)				
LTE 42		R = approx. 20 dB	Class 2	Class 0 [3]	Class 0 [3]
Fitted door without ThermoFrame [1]	U = 6.5 W/(m²·K)				
ART 42		R = approx. 20 dB	Class 2	Class 3	Class 3
Fitted door without ThermoFrame [2]	U = 4.0 W/(m²·K)				
Fitted door with ThermoFrame [2]	U = 3.8 W/(m²·K)				
ART 42 Thermo		R = approx. 20 dB	Class 2	Class 3	Class 3
Fitted door without ThermoFrame [2]	U = 3.4 W/(m²·K)				
Fitted door with ThermoFrame [2]	U = 3.2 W/(m²·K)				
LTH			Class 3	Class 0 [3]	Class 0 [3]
Fitted door with ThermoFrame [1]	U = 3.0 W/(m²·K)				

[1] The U-values apply to fitted doors without glazing with the dimensions 5000 × 2250 mm
[2] The U-values apply to fitted doors with synthetic double panes (S2), 26 mm, with the dimensions 5000 × 2250 mm
[3] Doors with ventilation slots, classes 2-3 on request
[4] Up to 70 Pa water pressure
[5] Valid for panelling and L-ribbing (LPU 42 doors, S-, M-, D- or T-ribbed: class 2)
[6] Higher wind load classes on request

Size range LPU 67 Thermo, LPU 42, LTE 42, ART 42, ART 42 Thermo

Standard and special sizes [1]

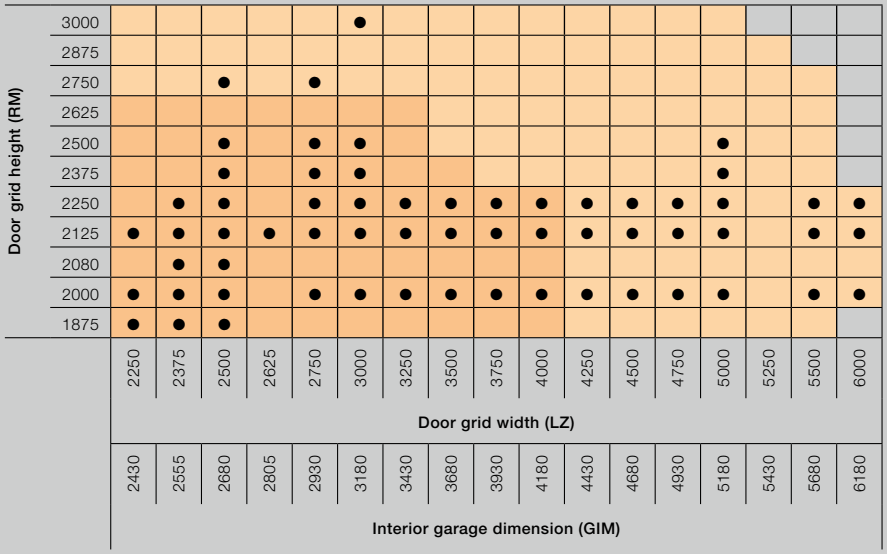

Modernisation sizes [2]

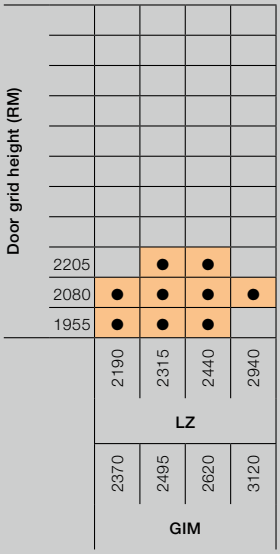

● = Available standard sizes depending on the door type and door style, intermediate sizes available as special sizes

[1] LPU 67 Thermo is only available in special sizes up to 5000 mm door width, SPU F42 Plus up to door sizes 7000 × 5000 mm, ART 42 / ART 42 Thermo up to 5500 × 2250 mm

[2] Not available for panel styles with Decograin surface finishes and solid timber doors

Ceiling heights and clear passage heights

Door grid height (RM)	Track application Z		Track application N		Track application L	
	Min. DE*	LDH**	Min. DE*	LDH	Min. DE*	LDH***
With operator						
3000			3210	3000	3115	2970
2875			3085	2875	2990	2845
2750			2960	2750	2865	2720
2625	2740	2595	2835	2625	2740	2595
2500	2615	2470	2710	2500	2615	2470
2375	2490	2345	2585	2375	2490	2345
2250	2365	2220	2460	2250	2365	2220
2125	2240	2095	2335	2125	2240	2095
2000	2115	1970	2210	2000	2115	1970
1875	1990	1845	2085	1875	1990	1845
With manual operation						
3000			3210	2950	3100	2900
2875			3085	2825	2975	2775
2750			2960	2700	2850	2650
2625	2725	2545	2835	2575	2725	2525
2500	2600	2420	2710	2450	2600	2400
2375	2475	2295	2585	2325	2475	2275
2250	2350	2170	2460	2200	2350	2150
2125	2225	2045	2335	2075	2225	2025
2000	2100	1920	2210	1950	2100	1900
1875	1975	1795	2085	1825	1975	1775

Door grid height (RM)	Track application Z	
	Min. DE**	LDH
With operator		
2205	2320	2175
2080	2195	2050
1955	2070	1925
With manual operation		
2205	2305	2125
2080	2180	2000
1955	2055	1875

* With ThermoFrame and operator: see fitting data

** LPU 67 Thermo: LDH – 55 mm

*** LPU 42: LZ > 3010 mm = LDH – 80 mm
LPU 67 Thermo: LZ < 3000 mm = LDH – 55 mm, LZ > 3010 mm = LDH – 105 mm

Dimensions in mm

Track applications

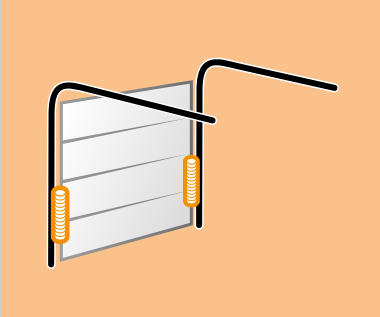

Track application Z: Tension spring track application with tension spring assembly

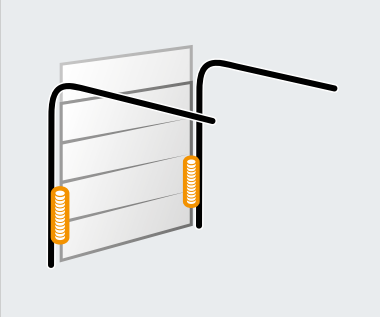

Track application BZ: Tension spring track application with tension spring assembly and flush-fitting panels

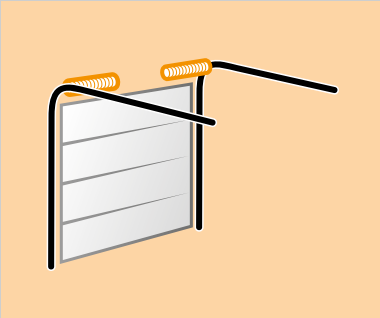

Track application N: Normal track application with torsion spring assembly

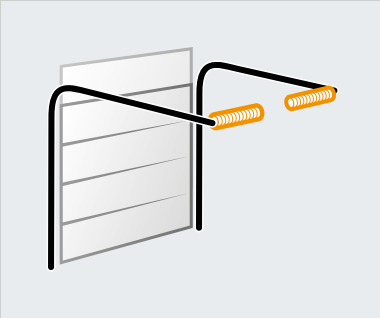

Track application BL: Low-headroom tracks with torsion spring assembly and flush-fitting panels

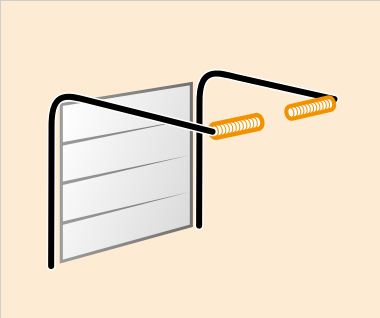

Track application L: Low-headroom tracks with torsion spring assembly

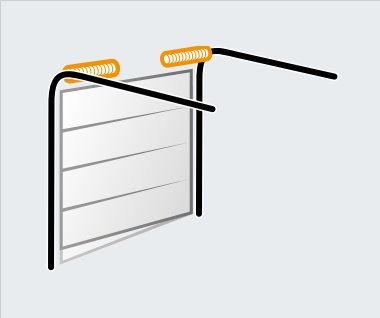

Track application SN: Normal track application with torsion spring assembly with chamfered bottom section (max. 300 mm height difference)

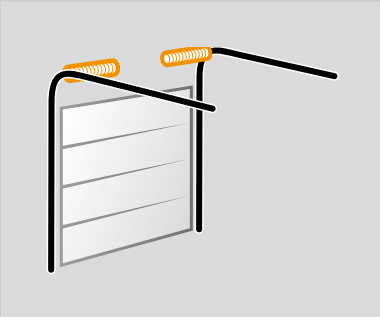

Track application H: High-lift track application with torsion spring assembly

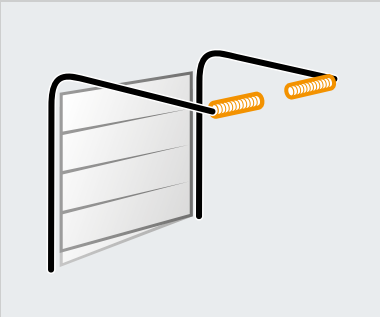

Track application SL: Low lintel application with torsion spring assembly with chamfered bottom section (max. 300 mm height difference)

Explanations

If you are interested in this track version for high-lift doors, contact your Hörmann specialist dealer.

LZ	Clear frame dimension
RM	Grid height
DE	Ceiling height **Note: The operator should be fitted 40 mm higher for dark coloured doors which are exposed to the sun.**
LDH	Clear passage height
GIM	Inside garage dimension
ET	Distance back

Track applications

Track application Z
(not for LTH 42 and LPU 42 with wicket door)
Max. width 4000 mm (max. 3000 mm for LPU 42 Silkgrain, LPU 67 Thermo, ART 42, ART 42 Thermo)
Max. height. 2625 mm (max. 2500 mm for LPU 42 Silkgrain, LPU 67 Thermo, ART 42, ART 42 Thermo)

Track application N
Max. width 6000 mm
Max. height 3000 mm

Track application L
Max. width 6000 mm
Max. height 3000 mm

Track application H (not for LPU 67 Thermo)
Max. width 5500 mm
Max. height 3000 mm

Track application BZ (not for LPU 67 Thermo)
Max. width 3000 mm
Max. height 3189 mm

Track application BL (not for LPU 67 Thermo)
Max. width 4000 mm
Max. height 3520 mm

Track application SN (only LPU 42)
Max. width 6000 mm
Max. height 3000 mm

Track application SL (only LPU 42)
Max. width 6000 mm
Max. height 3000 mm

For more detailed information, please see the fitting data or contact your Hörmann partner.

Horizontal view

Track application Z	Track application N	Track application L	Track application H

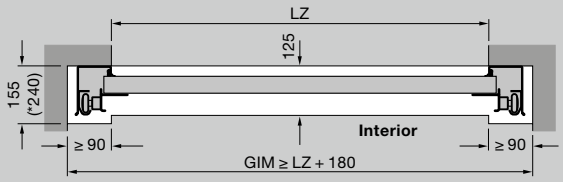

Fitting with track applications Z, N, L

Overall length operators (W)		Track application Z	Track application N	Track application L
Doors with operator				
Max. door height	2125 (K)	3200	3200*	3200
	2250 (K)		3200**	
	2375 (M)	3450	3450*	3450
	2500 (M)		3450**	
	2625 (L)	4125		
	3000 (L)		4125	4125

* Max. door height only for LPU 67 Thermo
** Max. door height only for LPU 42, LTE 42

Vertical views (with operator)

Track application Z

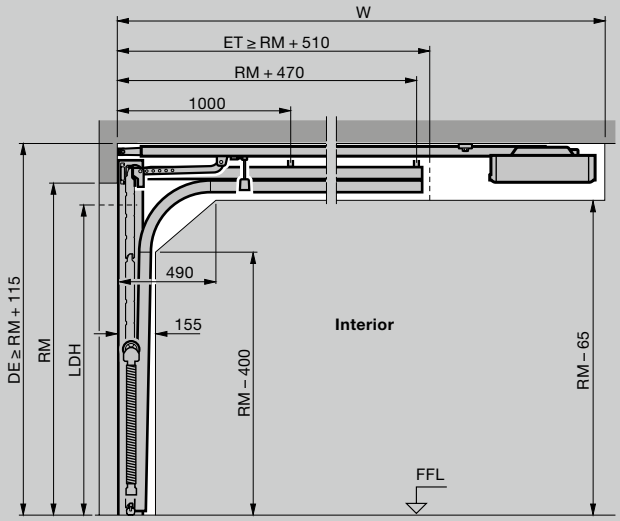

Track application N

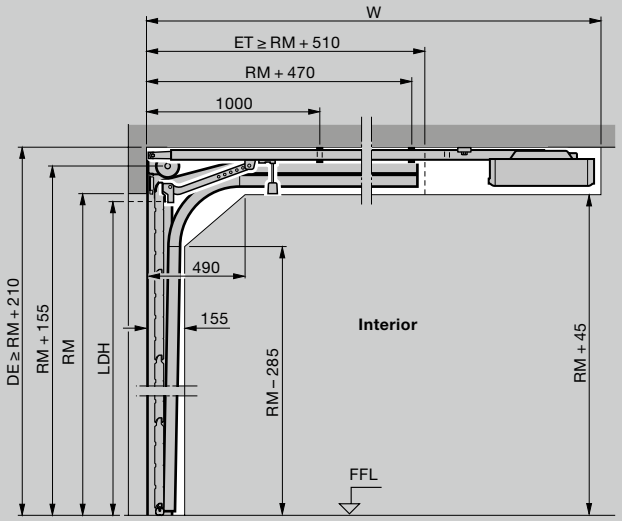

Track application L

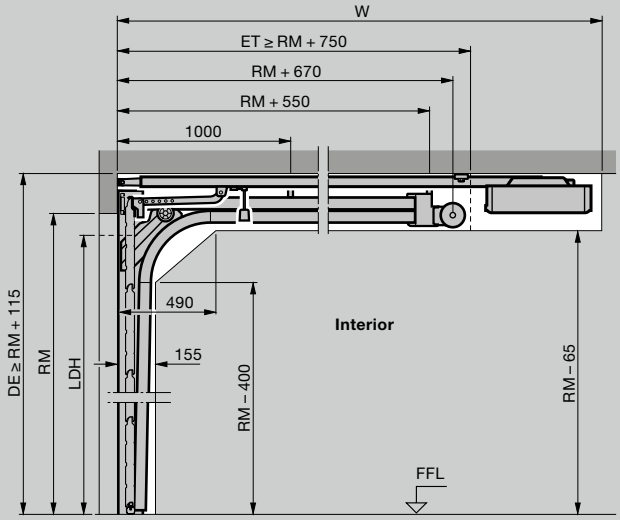

Track application H

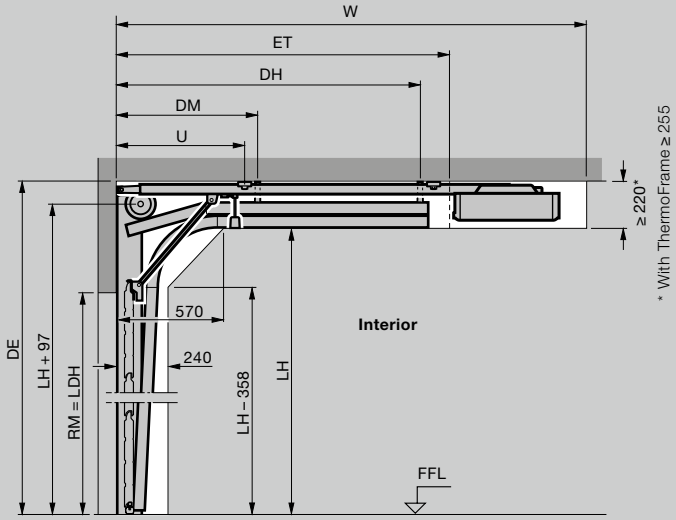

Dimensions in mm

Fitting with flush-fitting panel

Overall length operators (W)		Track application BZ	Track application BL
Doors with operator			
Max. door height	2125 (K)	3272	3272
	2375 (M)	3522	3522
	2625 (L)	4197	
	3000 (L)		4197

Vertical views

Track application BZ | Track application BL — **Without lintel**

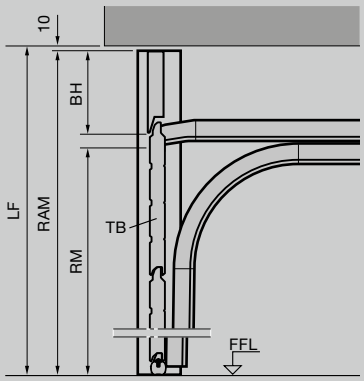

Track application BZ | Track application BL — **With lintel**

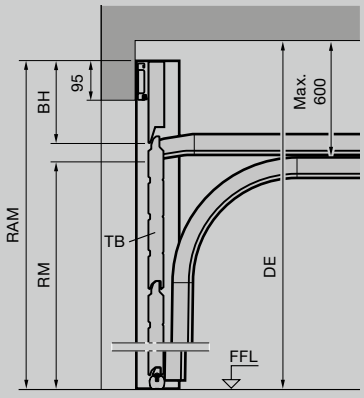

Dimensions in mm

Explanations

Operator booms

K Short boom
M Medium boom
L Long boom

Track applications

Z Tension spring track application
N Normal track application
L Low headroom track application
H High-lift track application
BZ Tension spring track application with flush-fitting panels
BL Low-lintel track application with flush-fitting panels

Ordering sizes

LZ Clear frame dimension
RM Grid height
RAM Overall frame dimension (of flush-fitting panels)
Min. = RM + 190 mm
Max. = RM + door section height
W Overall length with operator
LF Structural opening

DE Ceiling height
Note: The operator should be fitted 40 mm higher for dark coloured doors which are exposed to the sun.

LDH Clear passage height
See table on page 88

GIM Inside garage dimension
ET Distance back
TB Door leaf
BH Panel height
LH Track height
DM Ceiling suspension, centre
DH Ceiling suspension, back
FFL Finished floor level
U Front operator boom suspension

Note
Before fitting a sectional door, the structural openings must be finished and the floors be laid and level. **The clearance for fitting and operation of the door must be complied with.**

For more detailed information, please see the fitting data or contact your Hörmann partner.

Doors with wicket door with ribbing

Size range

Door grid height (RM)	2250	2375	2500	2750	3000	3250	3500	3750	4000	4250	4500	4750	5000
3000													
2875	○	○	○	○	○	○	○	○	○				
2750													
2625	○	○	○	○	○	○	○	○	○	○	○		
2500													
2375													
2250													
2205													
2125													
2080													
2000													
1955													
1875													

Door grid width (LZ)

Wicket doors with ribbing

Clear passage height Without glazing	Clear passage height With glazing	Lever height from FFL
1955	1955	831
1871	1871	799
2155	2155	906
2055	2055	868
1955	1955	831
1855	1855	793
2123	2203	924
2075	2155	906
1999	2079	877
1955	2035	861
1875	1955	831
1827	1907	813
1747	1827	782

Doors with wicket door with panelling

Size range

Door grid height (RM)	2250	2500	2750	3000	3250	3500	3750	4000
3000								
2875	□	□	□	□	□	□	□	□
2750	□	□	□	□	□	□	□	□
2625	□	□	□	□	□	□	□	□
2500								
2375								
2250								
2205	□	□	□	□	□	□	□	□
2125								
2080	□	□	□	□	□	□	□	□
2000								
1955	□	□	□	□	□	□	□	□

Door grid width (LZ)

Wicket doors with panelling

Clear passage height	Lever height from FFL
1955	831
1871	799
2155	906
2055	868
1955	831
1855	793
2203	924
2155	906
2079	877
2035	861
1955	831
1907	813

○ = Not possible with Decograin, Sandgrain and Silkgrain
□ = Not possible with Decograin

Dimensions in mm

Horizontal view

Track application N | Track application L

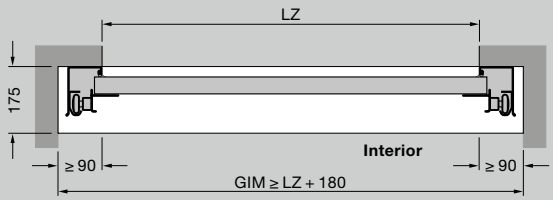

Vertical views

Track application N

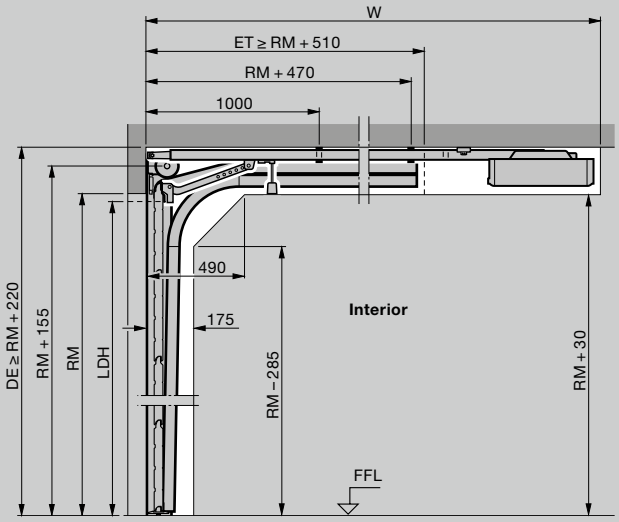

Track application L

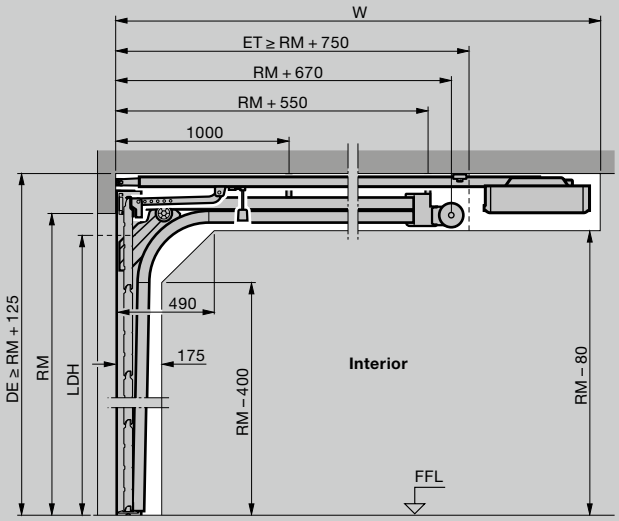

Dimensions in mm

Explanations

Track applications

N Normal track application
L Low headroom track application

Ordering sizes

LDB Clear passage width
LZ Clear frame dimension
RM Grid height
W Overall length with operator

DE Ceiling height
Track application N:
Manual operation ≥ RM + 220 mm
With operator ≥ RM + 235 mm
With operator and ThermoFrame ≥ RM + 255 mm
Track application L:
Manual operation ≥ RM + 125 mm
With operator ≥ RM + 125 mm
With operator and ThermoFrame ≥ RM + 145 mm

LDH Clear passage height
Track application N with trip-free threshold
Manual operation = RM – 160 mm
With operator = RM – 100 mm
Track application L with trip-free threshold:
Manual operation = RM – 160 mm
With operator = RM – 160 mm
Track application N with threshold:
Manual operation = RM – 100 mm
With operator = RM – 70 mm
Track application L with threshold:
Manual operation = RM – 150 mm
With operator = RM – 120 mm

GIM Inside garage dimension
ET Distance back
FFL Finished floor level

Fitting with ThermoFrame
Fitting with ThermoFrame
LDB = LZ – 12 mm
Fitting with ThermoFrame and frame covering (set 1–3)
LDB = LZ – 15 mm

Note
The opening height must not be less than the ordering size of the garage door (RM), otherwise the wicket door will not open.

For more detailed information, please see the fitting data or contact your Hörmann partner.

Solid timber and steel side doors – horizontal views

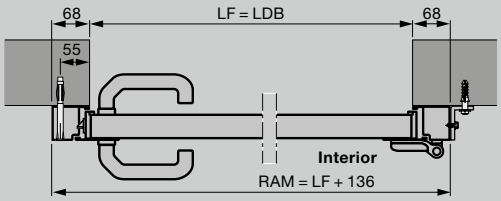

Side door with aluminium block frame, profile type 1
Fitting behind the opening

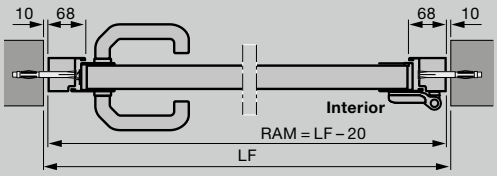

Side door with aluminium block frame, profile type 2
Fitting in the opening

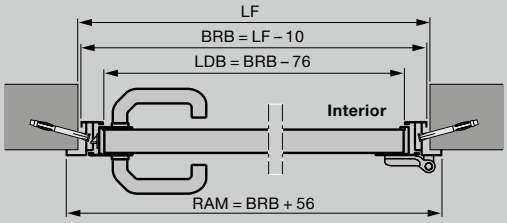

Side door with aluminium corner frame, profile type 1 or 2
Internal fitting

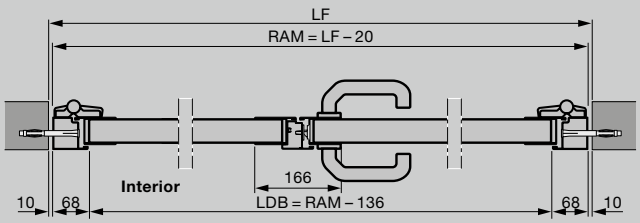

Double-leaf side door with aluminium block frame, profile type 2
Fitting in the opening

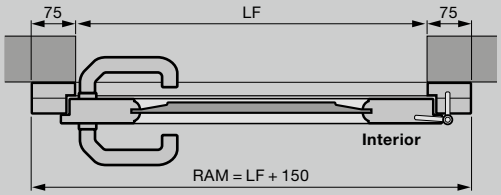

Solid timber side door
Fitting behind the opening

- Double-leaf side door with asymmetrical division
- Double-leaf side door opening inwards and outwards

Solid timber and steel side doors – vertical views

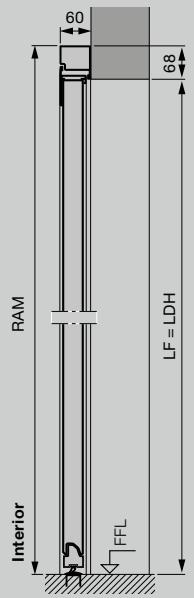

Side door with aluminium block frame, profile type 2
Fitting behind the opening

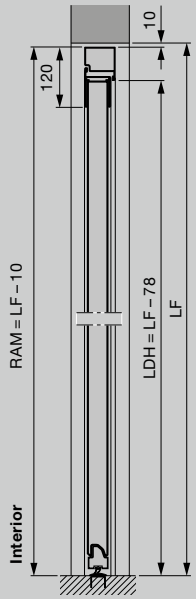

Side door with aluminium block frame, profile type 2
Fitting in the opening

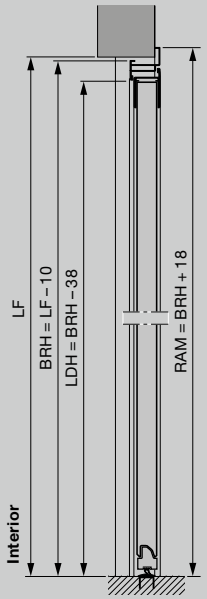

Side door with aluminium corner frame, profile type 2
External fitting

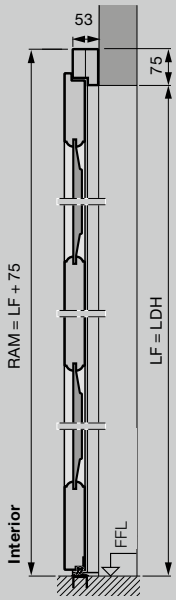

Solid timber side door
Fitting behind the opening

Dimensions in mm

Steel side doors

Profile type 1 (fitting behind the opening) with S-, M-, L-ribbing, S-panelled, block frame

Structural opening	Ordering size = RAM	Lever height* from FFL	Door section height B
855 – 875 × 1990 – 2000	990 × 2058	955	500
855 – 875 × 2115 – 2125	990 × 2183	1010	531
980 – 1000 × 1990 – 2000	1115 × 2058	955	500
980 – 1000 × 2115 – 2125	1115 × 2183	1010	531

Profile type 2 (fitting behind the opening) with S-, M-, L-, D-, T-ribbing, S-panelled, block frame

Structural opening	Ordering size = RAM	Lever height* from FFL	Door section height B
855 – 875 × 1990 – 2000	990 × 2058	1050	500
855 – 875 × 2115 – 2125	990 × 2183	1050	531
980 – 1000 × 1990 – 2000	1115 × 2058	1050	500
980 – 1000 × 2115 – 2125	1115 × 2183	1050	531

Profile type 2 (fitting in the opening) with S-, M-, L-, D-, T-ribbing, block frame

Structural opening	Ordering size = RAM	Lever height* from FFL	Door section height B
875 × 2000	855 × 1990	1050	500
875 × 2125	855 × 2115	1050	531
1000 × 2000	980 × 1990	1050	500
1000 × 2125	980 × 2115	1050	531

Profile type 1 (only opening inwards, internal fitting) with S-, M-, L-ribbing, S-panelled, corner frame

Ordering size = BRM	Lever height* from FFL	Door section height B
875 × 2000	955	500
875 × 2125	1010	531
1000 × 2000	955	500
1000 × 2125	1010	531

Profile type 2 (internal or external fitting) with S-, M-, L-, D-, T-ribbing, corner frame

Ordering size = BRM	Lever height* from FFL	Door section height B
875 × 2000	1050	500
875 × 2125	1050	531
1000 × 2000	1050	500
1000 × 2125	1050	531

Solid timber side doors

Ordering size = RAM	Structural opening	Lever height* from FFL
Fitting behind the opening (S-, M-, L-ribbed, panelled)		
1005 × 2190	855 – 875 × 2115 – 2125	1050
1130 × 2190	980 – 1000 × 2115 – 2125	1050
Fitting behind the opening (style 401, 403, 404, 405)		
1130 × 2190	980 – 1000 × 2115 – 2125	1050

Dimensions in mm

Explanations

P1	Profile type 1 (narrow leaf frame)
P2	Profile type 2 (wide leaf frame)
LDB	Clear passage width
LDH	Clear passage height
RAM	Overall frame dimension
LF	Structural opening
BRM	Nominal size
BRB	Nominal size - width
BRH	Nominal size - height
FFL	Finished floor level

Special sizes
Single-leaf side doors on request
Double-leaf side doors:
1330 – 2500 × 1960 – 2558 mm

* You can find the lever heights for special sizes in the technical manual.

For more detailed information, please see the fitting data or contact your Hörmann partner.

Hörmann: Quality without Compromise

Hörmann KG Amshausen, Germany

Hörmann KG Antriebstechnik, Germany

Hörmann KG Brandis, Germany

Hörmann KG Brockhagen, Germany

Hörmann KG Dissen, Germany

Hörmann KG Eckelhausen, Germany

Hörmann KG Freisen, Germany

Hörmann KG Ichtershausen, Germany

Hörmann KG Werne, Germany

Hörmann Alkmaar B.V., Netherlands

Hörmann Legnica Sp. z o.o., Poland

Hörmann Beijing, China

Hörmann Tianjin, China

Hörmann LLC, Montgomery IL, USA

Hörmann Flexon LLC, Burgettstown PA, USA

Shakti Hörmann Pvt. Ltd., India

Hörmann is the only manufacturer worldwide that offers you a complete range of all major building products from one source. We manufacture in highly-specialised factories using the latest production technologies. The close-meshed network of sales and service companies throughout Europe, and activities in the USA and Asia, make Hörmann your strong partner for first-class building products, offering “Quality without Compromise”.

GARAGE DOORS

OPERATORS

INDUSTRIAL DOORS

LOADING EQUIPMENT

HINGED DOORS

DOOR FRAMES

Hörmann (UK) Ltd, Gee Road, Coalville, Leicestershire LE67 4JW
Phone (01530) 513000, Fax (01530) 513001

Issue 03.2019 / Print 05.2019 / HF 85184 EN-United Kingdom / PDF www.hormann.co.uk